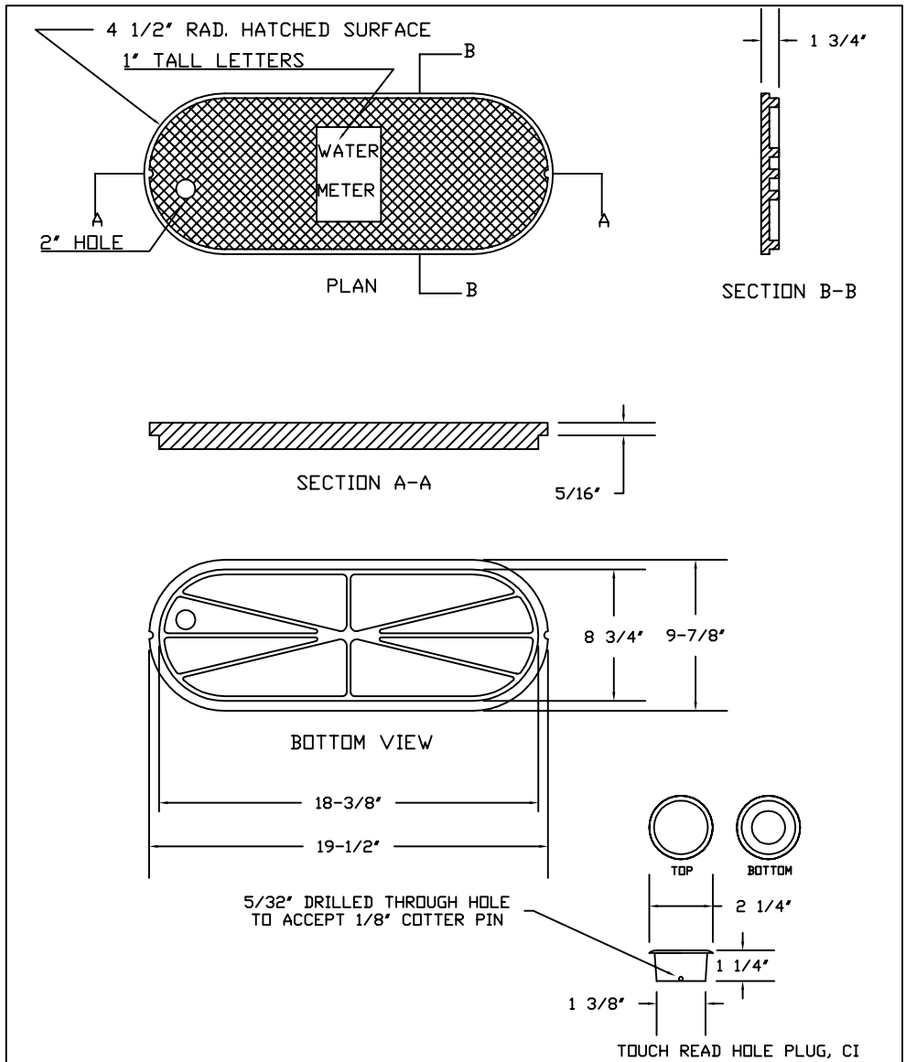

WATER METER BOX LID

SHEET 2 OF 2

Chesapeake VIRGINIA

DESIGN AND CONSTRUCTION STANDARDS

WATER METER BOX (TYPE I)

		DR. BY: CEB/BMH	DATE: 06/01/17	**WD_03**
06/01/17		CHK. BY:	DATE:	
DATE	REVISIONS	APP. BY: TEW	DATE: 06/01/17	04

APPROVED FOR THE WEB _____ Utility Engineer / / Date

Copyright Digital Version City of Chesapeake 2017