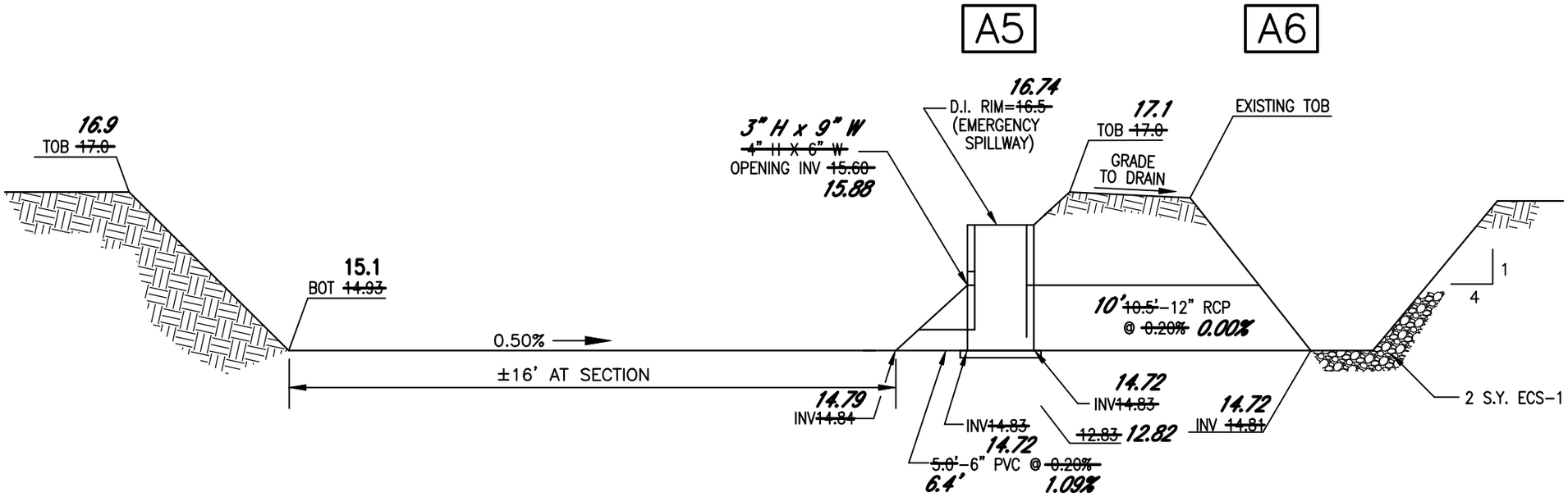

STORMWATER DETENTION FACILITY - POND-A (PERMANENT BMP) - SECTION

N.T.S.

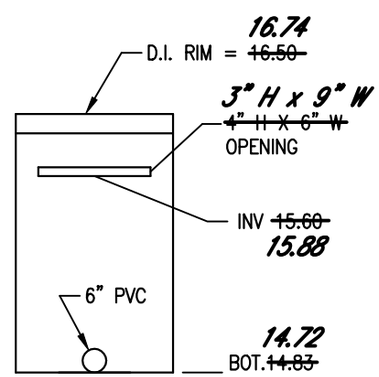

A5

N.T.S.

DRY IMPOUNDMENT DETAIL (2)