APPENDIX N
Point of Entry Reverse Osmosis System

APPLIED® SYSTEMS

SERIES AA – 350 TO 1,000 GPD SYSTEMS

STANDARD EQUIPMENT

- Thin Film Composite Membranes
- Stainless Steel Pressure Vessels
- Rotary Vane Brass Pump
- Motor
- 5 Micron Pre-Filter (1)
- 10 Micron Carbon Filters (2)
- Polypropylene Filter Housings (3)
- Automatic inlet feed solenoid valve
- Heavy duty powder coated frame
- Liquid Filled System Pressure Gauges
- Low Pressure Switch
- System control valve
- Recycle control valve
- Polyethylene High Pressure Tubing
- Product Tank Pressure Control ***(Required to turn system on/off with pressurized tank - tank sold separately)***

OPTIONAL EQUIPMENT

- * Pressurized Product Water Storage Tank 40 or 88 Gallon Size
- Stainless Steel Pump
- *Pre-treatment equipment:
  Softener
  Carbon filter
  Multi-media filter

**Recommended Minimum Options*

Model	Capacity		Elements*		Line Sizes (In/Cm)			Dimensions (In/cm)			Approx Shipping Weight (lb/kg)
	GPD	m³/day	Qty.	Length (In/cm)	Inlet	Perm.	Conc.	Length	Width	Height	
AA-12521-116	350	1.3	1	21/54	.375/1	.375/1	0.25/1	14/36	26/66	20/51	60/26
AA-22521-116	700	2.7	2	21/54	.375/1	.375/1	0.25/1	14/36	26/66	20/51	70/30
AA-32521-116	1000	3.8	3	21/54	.375/1	.375/1	0.25/1	14/36	26/66	20/51	65/21

**Elements are 2.5" (6.4 cm) Diameter*

NOTES

- All dimensions and weights are approximate.
- System must operate with a pressurized storage tank to turn system on/off (quoted separately).
- Systems rated at 77°F (25°C) using 1000 ppm sodium chloride solution and 200 psi pressure. System capacity changes significantly with water temperature. For higher TDS, a water analysis must be supplied and could result in modifications to the system.
- Chlorine must be removed prior to RO system if present in the feed water.
- Water must be pretreated by a softener or antiscalant to avoid scaling the membranes.
- Standard packaging is boxed, crating optional.

ORDERING INFORMATION

Please add our voltage codes to the end of the model number when ordering.
Example: AA-12521-**116** = 110v / 1 ph / 60 hz.

Voltage Codes:
116 = 110v/ 1ph/ 60hz
215 = 220/230v, 1ph, 50hz

Three Phase Not Available

AMI® APPLIEDMEMBRANES INC.® APPLIED®
are trademarks of APPLIED MEMBRANES, INC. © 2007 Applied Membranes, Inc

FILE NO: D:\ACAD\STDS\AA\AAD200A 08/06/97 09:41

REVISIONS

ZONE	REV	DESCRIPTION	DATE	DRN	APPROVED
-	A	REVISED SHOWING OPTIONS	6-6-97	TLF	

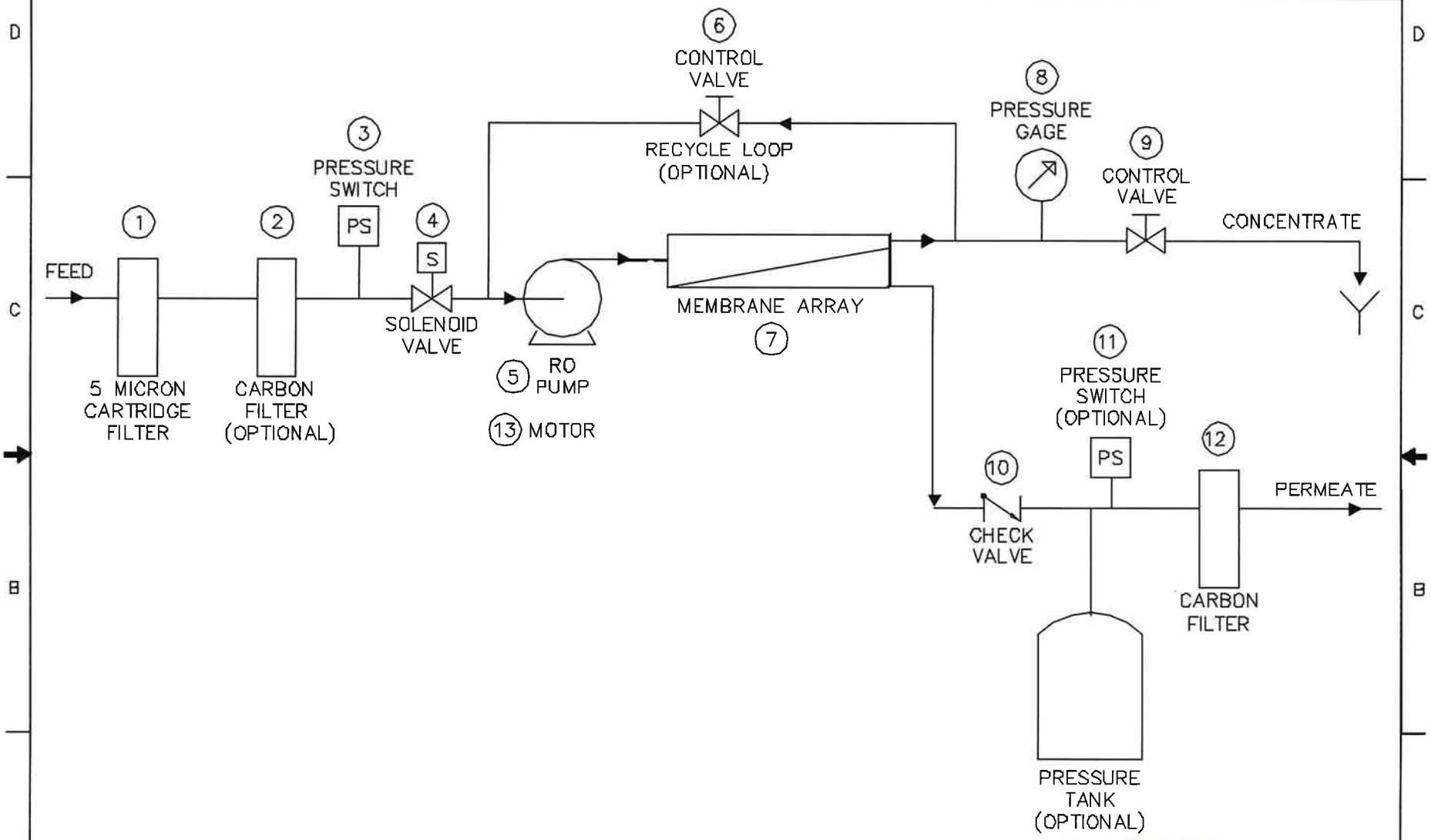

THIS PRINT CONTAINS CONFIDENTIAL INFORMATION WHICH IS THE PROPERTY OF APPLIED MEMBRANES,INC. BY ACCEPTING THIS INFORMATION, THE BORROWER AGREES THAT IT WILL NOT BE USED FOR ANY PURPOSE OTHER THAN THAT FOR WHICH IT WAS LOANED. ALL PERSONS WORKING WITH THIS INFORMATION AND RELATED INFORMATION SHOULD ACKNOWLEDGE AND EXERCISE A SENSE OF CONFIDENTIALITY.

WORK ORDER NO	WO-	
DRN BY	TLF	8-8-97
CHK BY	-	-
PROJ ENGR	MW	6-6-97
MODEL NO	AA	
CUSTOMER	-	

APPLIED MEMBRANES INC.

P & ID

"AA"- SERIES RO SYSTEM

SIZE	PROJ NO	TYPE NO	REV
C		AA0200	A

SCALE NONE WEIGHT SHEET 1 OF 1

APPLIED MEMBRANES INC.®

ISO 9001: 2000 Certified Company

Industry Leader in RO Expertise and Membrane Applications Since 1983™

APPLIED® SYSTEMS

Complete Reverse Osmosis RO Systems

Series AA

220 to 700 Gallons/Day (0.8 to 2.7m³/Day)

Scroll to the bottom for additional photographs

Designed to produce low dissolved solids water from tap or well water, these Reverse Osmosis RO systems use high efficiency reverse osmosis membranes. The product water is used in applications such as restaurants, aquariums, small manufacturing, and a wide variety of other applications.

Series AA RO systems offer a compact design. These economically priced systems are simple to install and operate. When combined with a water softener as pretreatment, they offer a reliable water purification solution.

Key Features:

- Over 20 years of experience is reflected in our quality
- Compact, Heavy Duty, Powder Coated Frame
- Proven components used throughout the system
- Conservatively engineered for reliable long term performance
- Factory tested to ensure trouble-free operation

STANDARD EQUIPMENT AA RO Systems

- Thin Film Composite Membranes
- Stainless Steel Pressure Vessels
- Rotary Vane Brass Pump
- Motor
- 5 Micron Pre-Filter (1)
- 10 Micron Carbon Filters (2)
- Polypropylene Filter Housings (3)
- Brass Auto Feed Shut-Off
- Heavy duty powder coated frame
- Liquid Filled System Pressure Gauges
- Low Pressure Switch
- Brass Pressure Regulator
- Polyethylene High Pressure Tubing
- Product Tank Pressure Control (turns system off with pressurized tank - tank sold separately)

OPTIONAL EQUIPMENT

- Stainless Steel Pump
- Stainless Steel Back Pressure Regulator
- Pressurized Product Water Storage Tank*
- Tank Level Control for Atmospheric Tank
- Softener*
- Backwashable Pretreatment* – Carbon or Media

in 10, 30, 40 or 88 Gallon Size
- Recycle Loop with Brass Valve
- Crating

Recommended Minimum Options

Model	Capacity		Elements (2.5" Dia)		Line sizes (in/cm)			Dimensions, in.(cm)			Approx. Weight (lb/kg)
	GPD	m3/day	Qty	Length (in/cm)	Inlet	Perm	Conc	Length	Width	Height	
AA-12514	220	0.8	1	14/36	.375/1	.375/1	0.25/1	14/36	26/66	20/51	55/24
AA-12521	350	1.3	1	21/54	.375/1	.375/1	0.25/1	14/36	26/66	20/51	60/26
AA-32514	525	2.0	3	14/36	.375/1	.375/1	0.25/1	14/36	26/66	20/51	6521
AA-22521	700	2.7	2	21/54	.375/1	.375/1	0.25/1	14/36	26/66	20/51	70/30

NOTES

- All dimensions and weights are approximate.
- System must operate with a pressurized storage tank to turn system on/off (quoted separately).
- Systems rated at 77°F (25°C) using 1000 ppm sodium chloride solution and 200 psi pressure. System capacity changes significantly with water temperature. For higher TDS, a water analysis must be supplied and could result in modifications to the system.
- Chlorine must be removed prior to RO system if present in the feed water.
- Water must be pretreated by a Water Softener or antiscalant to avoid scaling the membranes.
- Standard packaging is boxed, crating optional.

ORDERING INFORMATION

Please add our voltage codes to the end of the model number when ordering.
Example: AA-12521-**116** = 110V/1 ph/ 60 hz
Voltage Codes: *Three Phase Not Available*
215 = 220/230, 1 ph, 50 Hz **216** = 220/230, 1 ph, 60 hz **116** = 110v/1 ph/60 hz

Replacement Parts and Consumables for AA Reverse Osmosis Systems

- Click here for replacement Reverse Osmosis Membranes
- Click here for replacement Membrane Pressure Vessels
- Click here for replacement Sediment filters
- Click here for replacement Carbon Filters
- Click here for replacement Filter Housings
- Click here for replacement Components
- Click here for Membrane Cleaning Cartridges

PHOTOGRAPHS of AA Series RO Systems

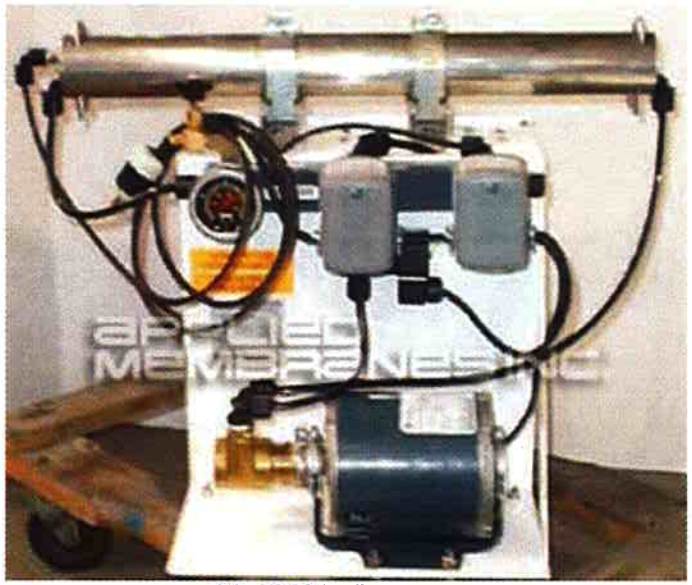

AA-12521 - Front View

AA-22521 - Front View

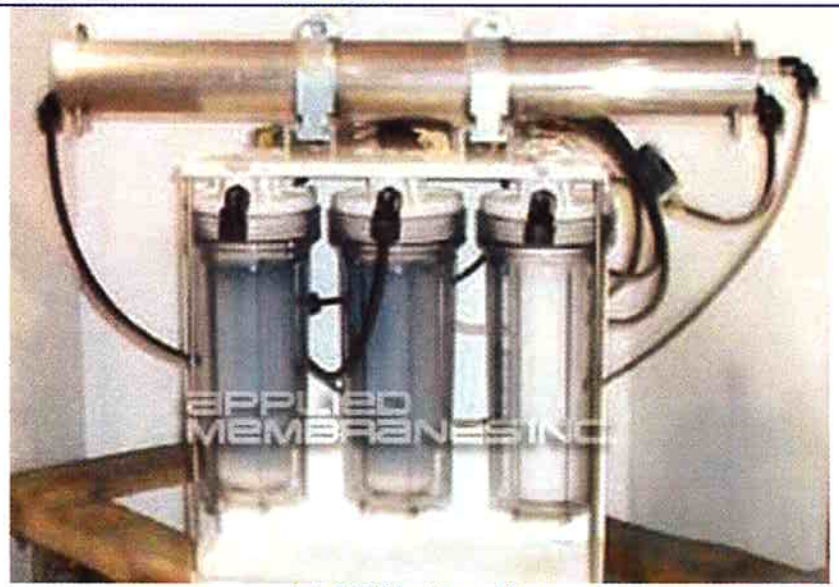

AA-12521 - Rear View

AA-22521 - Rear View

'This page was last updated 06/30/08

*For prompt, courteous and reliable service, **contact us** today!*

Home | Contact Us | How To Order

Copyright © 2009 Applied Membranes, Inc. All Rights Reserved.

[Contact Us] [How to Purchase our Products] [Download Catalog] [Download Manuals] [Download Forms & Product Literature] [Track an Order] [Membranes] [RO Systems] [Seawater Desalination Systems] [Water Treatment Systems] [Media Filtration] [Water Softeners] [Iron Filters] [Filters & Housings] [Membrane Housings/Pressure Vessels] [Residential Components] [Pumps] [Membrane Chemicals] [Ultraviolet] [Ozone] [Water Quality Test Equipment] [About Applied Membranes]

APPLIED® FILTERS

PYROLOX FILTERS FOR IRON REMOVAL

About Pyrolox:

A mined ore, Pyrolox effectively reduces iron, sulfur and manganese from problem water.

A Naturally mined ore, Pyrolox is a mineral form of manganese dioxide which has been used in water treatment for more than 75 years. Pyrolox is a granular filtration media for hydrogen sulfide, iron and manganese reduction. Pyrolox functions as a catalyst, but itself remains relatively unchanged. Pyrolox works on a principle whereby the hydrogen sulfide, iron and manganese are oxidized and trapped on the media while simple backwashing cleans the bed. No chemical regeneration is required, nothing is imparted into the drinking water and Pyrolox has a high capacity for low contaminant concentrations. Pyrolox can be used in conjunction with aeration, chlorination, ozone or other pretreatment methods for difficult applications. Chlorine or other oxidants accelerate the catalytic reaction.

With SS Jacket***

With No Jacket

Advantages of Pyrolox:

- Effective reduction of iron, sulfur and manganese
- Durable material with long service life and low annual attrition of bed
- No chemical regeneration required, only periodic backwashing

Conditions for Operation:

- pH: 6.5 - 9.0
- Because of its heavy weight, it is very important that Pyrolox filters are backwashed properly to insure adequate bed expansion and continued service life.

Iron Filters (Pyrolox)

Model No.*	Media (Cu.Ft.)	Service Flow Rate** (GPM)	Backwash** (GPM)	Fleck Valve Head	Tank Size (Dia." × H.")	Pipe Size (in.)	Approx. Ship. Wt. (lbs)
W-MFI744P	0.3	1.3	7	5600	7 × 44	¾	75
W-MFI844P	0.5	1.7	7	2510	8 × 44	1	95
W-MFI940P	0.6	2.2	12	2510	9 × 40	1	100
W-MFI1040P	1.0	2.7	15	2510	10 × 40	1	155
W-MFI1054P	1.0	2.7	15	2510	10 × 54	1	165
W-MFI1252P	1.5	3.9	15	2510	12 × 52	1	245
W-MFI1354P	2.0	4.6	25	2750	13 × 54	1	285
W-MFI1465P	2.5	5.3	25	2750	14 × 65	1	435
W-MFI1665P	3.0	7.0	30	2850	16 × 65	1.5	465
W-MFI2162P	4.0	12.0	49	2850	21 × 62	1.5	635
W-MFI2472P	6.0	15.7	60	3150	24 × 72	2	905

System Shown with Optional Skid Mounting & Control Panel

Notes:

* Please add the appropriate voltage code to the end of the model no. when ordering.
110v/60Hz = 116, 220v/60Hz = 216, 220v/50Hz = 215 *Example: W-MFI744P-116*

** 5 gpm per sq. ft. of media is the best design condition for filtration. Backwash flow rate based on 25 psi pressure drop.

*** Stainless Steel Jacket available for 9-16" Diameter as an additional option.

Specifications

- Vessel is rated at 150 psi maximum operating pressure, 120°F maximum operating temperature.
- All Systems Automatic
- Fleck Control Valve
- Standard Valve Configuration Below. Metered Valve, Electronic Valve, or change to 7/12-Day timer are available as options.
  - 7"-14" Diameter: 7-Day Timer.
  - 16"-48" Diameter: 12-Day Timer.

AMI® APPLIEDMEMBRANES INC.® APPLIED®
are trademarks of APPLIED MEMBRANES, INC. © 2006 Applied Membranes, Inc

Also check our Filtration Media, listed on Page 7-11.

APPLIED® FILTERS

CARBON FILTERS – GRANULAR ACTIVATED (GAC)

About Carbon Filters:

These filters are used to reduce chlorine, organics, color, tannin, and objectionable tastes and odors from water. Automatic backwashing system removes the trapped contaminants within the filter bed and washes them down the drain. Our Household Carbon Filters (10"-12" Diameter) use NSF approved coconut shell based carbon.

With SS Jacket***

With No Jacket

Advantages of Carbon Filtration:

- **Significantly reduce the following contaminants:**
  - Chlorine
  - Chlorine By-Products such as Trihalomethanes (THMs)
  - Bad Tastes and Odors
  - Turbidity
  - Herbicides, Pesticides & Insecticides
  - Volatile Organic Chemicals (VOCs)

Model No.*	Volume of Media (Cu.Ft.)	Flow Rate (GPM)** 5gpm/ft.^{2}	15gpm/ft.^{2}	Backwash Flow (GPM)**	Fleck Valve Head	Tank Size (Dia"×H")	In/Out Conn. (in.)	Approx. Ship. Wt. (lbs)
W-G744	0.4	1	4	2	5600	7 × 44	¾	60
W-G844	0.5	2	5	3	5600	8 × 44	¾	62
W-G940	0.7	2	6	3.5	5600	9 × 40	¾	65
W-G1040	1.0	2	7	4	5600	10 × 40	¾	70
W-G1054	1.4	2	7	4	5600	10 × 54	¾	80
W-G1252	1.9	4	12	6	2510	12 × 52	1	100
W-G1354	2.4	4	14	7	2510	13 × 54	1	135
W-G1465	3.0	5	16	7	2510	14 × 65	1	185
W-G1665	4.0	7	21	15	2510	16 × 65	1	235
W-G2162	8.0	13	36	25	2850	21 × 62	1.5	335
W-G2472	10.0	15	47	40	2850	24 × 72	1.5	410
W-G3072	15.0	24	74	55	3150	30 × 72	2	485
W-G3672	20.0	35	106	75	3150	36 × 72	2	785
W-G4272	30.0	48	144	100	3900	42 × 72	3	935
W-G4872	40.0	60	188	100	3900	48 × 72	3	1,535

Notes:

* Please add the appropriate voltage code to the end of the model no. when ordering.
110v/60Hz = 116, 220v/60Hz = 216, 220v/50Hz = 215 *Example: W-G744-116*

** 5 gpm per sq. ft. of media is the best design condition for filtration. For relatively clean water, you may go up to design criteria of 15 gpm per sq. ft. Backwash flow rate based on 25 psi pressure drop.

*** Stainless Steel Jacket available for 9-16" Diameter as an additional option.

Specifications

- Vessel rated at 150 psi max. operating pressure, 120°F max. operating temp.
- All Systems Automatic
- Fleck Control Valve
- Standard Valve Configuration Below. Metered Valve, Electronic Valve, or change to 7/12-Day timer are available as options.
  - 7"-14" Diameter: 7-Day Timer. • 16"-48" Diameter: 12-Day Timer.

Systems Shown with Optional Skid Mounting and Control Panel

AMI APPLIEDMEMBRANES INC.® APPLIED®
are trademarks of APPLIED MEMBRANES, INC. © 2006 Applied Membranes, Inc

Also check our Filtration Media, listed on Page 7-11.