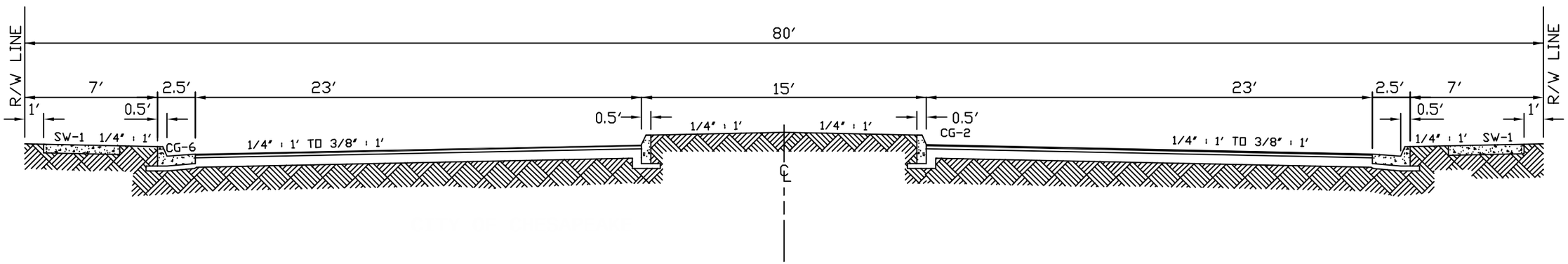

Chesapeake VIRGINIA

DESIGN AND CONSTRUCTION STANDARDS

TYPICAL SECTION FOR 80' R/W

08/01/03	REV. FOR INTERNET 2003	CHK. BY:	DATE:	RW-80
DATE	REVISIONS	APP. BY:	DATE:	06

FILE G:\...\ACADFILES\PFM\STREET SECTION & GEOMETRIC DESIGNS\(06) RW-80

APPROVED FOR THE WEB _____ City Engineer / / Date

Copywrite Digital Version City of Chesapeake 2003