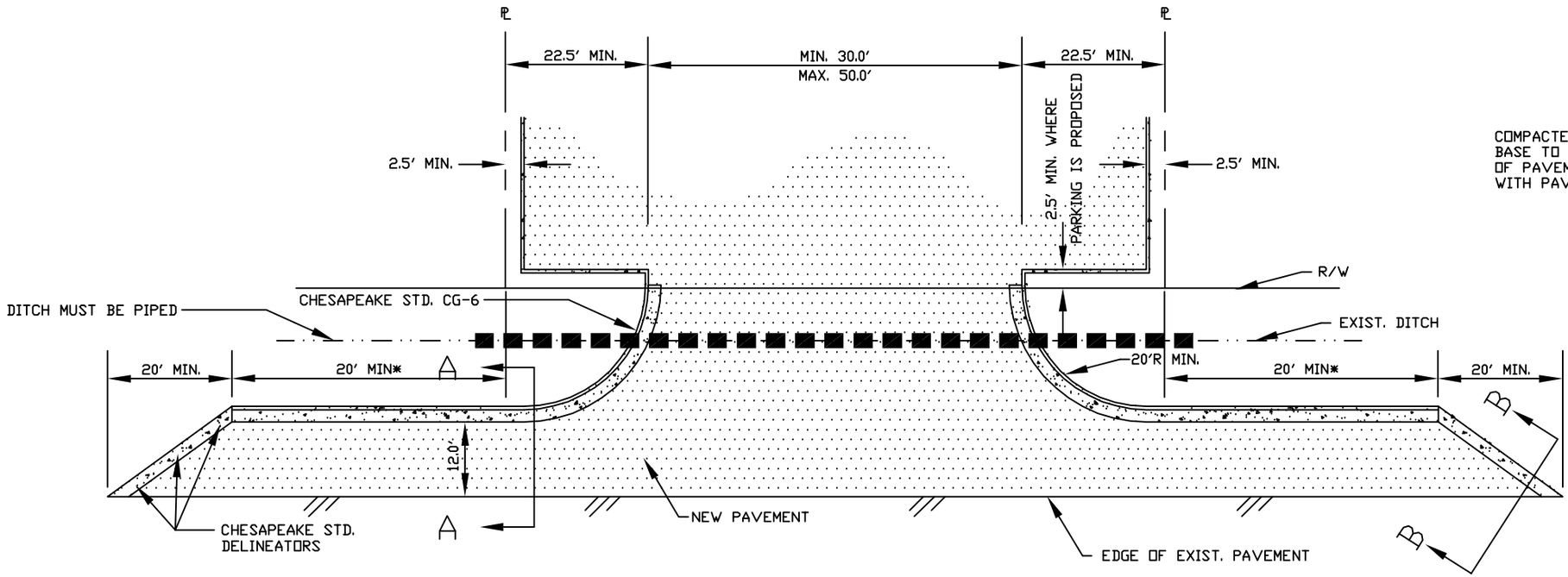

COMPACTED SUBGRADE AND AGGREGATER BASE TO EXTEND TWO FEET BEYOND EDGE OF PAVEMENT. MATCH GRADE OF STONE WITH PAVEMENT.

* ACCEL/DECEL LENGTH WILL INCREASE AS WARRANTED BY TRAFFIC CONDITION.

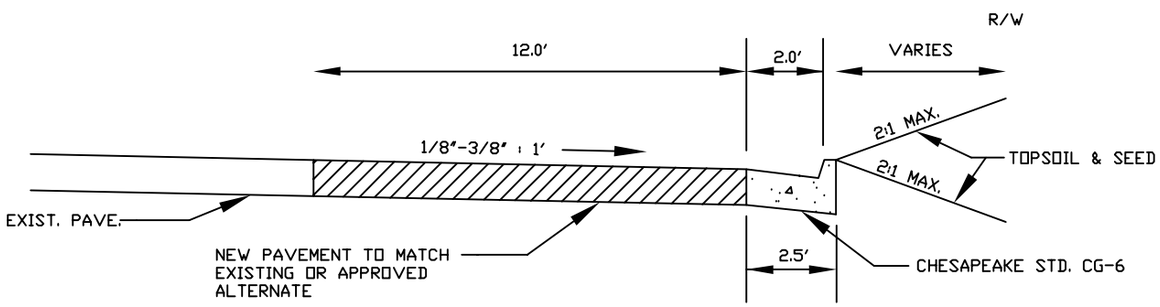

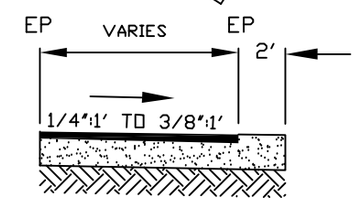

SECTION B-B

N.T.S.

Chesapeake VIRGINIA		DESIGN AND CONSTRUCTION STANDARDS		
		COMMERCIAL ENTRANCE FOR DIVIDED ARTERIAL HIGHWAYS WITHOUT SERVICE ROADS		
		DR. BY:	DATE:	CG-12
08/01/03	REV. FOR INTERNET 2003	CHK. BY:	DATE:	
DATE	REVISIONS	APP. BY:	DATE:	18

FILE G:\...\ACADFILES\PFM\CURBS_ ENTRANCES_ GUTTERS AND SIDEWALKS\(18) CG-12

APPROVED FOR THE WEB _____ _____
City Engineer Date

Copywrite Digital Version City of Chesapeake 2003