South Norfolk Historic & Architectural Review Board

October 1, 2020

AGENDA

Board of Historic and Architectural Review
October 1, 2020
Portlock Gallery
3815 Bainbridge Blvd.
5:30 PM

A. Call To Order

B. Roll Call

C. Approval of the September 3, 2020 regular meeting minutes.

D. Consent Agenda

E. Regular Agenda

1. **1121 Rodgers Street**
   Replace metal roof with architectural asphalt shingles, replace porch metal roof with metal, and demolish rear chimney.

2. **1123 Park Avenue**
   Upgrade home and detached garage 3-tab asphalt shingle roof to architectural asphalt shingles in Weather Wood, and install Harvard Slate dutch lap vinyl siding (wrap integral and decorative trim with PVC coating including rakes, soffits, fascia, frieze, porch ceilings, and window trim).

3. **1218 Jackson Avenue**
   Install solid concrete driveway.

4. **1125 Decatur Street**
   Install solar panels.

F. Old Business

G. New Business
   1. **Speaker rules**

H. Committee Reports

I. Zoning Inspection Status Report

J. Legal Guidance

K. Administrative Approvals

L. Citizen Input

M. Adjournment

Meeting Minutes
Historic and Architectural Review Board (HARB)
September 3, 2020
Portlock Gallery – 3815 Bainbridge Blvd.

Roll Call

HARB Members Present: Chair – Joe Maguire, Vice-Chair Marilee Peterson (via GoToMeeting), Tammi Amick, and Ellsworth Spicher.

Staff: Meredith H. Jacobi, Legal Counsel – City Attorney's Office; Pam Witham (via GoToMeeting), and Carlos Rodriguez, Code Compliance – Development and Permits; and Nathen Lamb, Recording Secretary – Planning Department.

Chair J. Maguire called the meeting to order at 5:35 p.m.

Minutes

Approval of the August 6, 2020 regular meeting minutes; ***motion to approve minutes as submitted by E. Spicher, and seconded by J. Maguire, all members present voting yes.***

Consent Agenda

None

Regular Agenda

1421 Chesapeake Avenue

Original Request

- After-the-fact replacement of attic window with vinyl window, front door replaced with steel door with decorative glass, remove gable fascia trim, and paint metal roof with Black Slate Flat Multi-Surface Exterior Roof Paint; HARB added the following stipulations: replace attic window with one-over-one double hung windows with half-moon top cover in vinyl, replace front gable fascia like for like, and install a craftsman style door; ***motion to approve application with stipulations made by J. Maguire, and seconded by E. Spicher, all members present voting yes.***

1121 Rodgers Street

Original Request

- Replace metal roof with architectural asphalt shingles, replace porch roof with metal, and demo rear chimney, applicant absent; ***motion to continue application as submitted made by J. Maguire, and seconded by T. Amick, all members present voting yes.***

1400 Chesapeake Avenue

Original Request

- Replace front porch floor, repair railing and columns, and repaint like for like; replace side yard staircase in same style; ***motion to deny application in part made by T. Amick, motion died, motion to deny application in part made by J. Maguire, and seconded by E. Spicher, two (2) members voting no, two (2) members voting yes, motion died, motion to approve in part made by J. Maguire, seconded by E. Spicher, three (3) members present voting yes, one (1) opposed.***

1128 Seaboard Avenue

Original Request

- Reapprove PLN-CAPP-2020-022, and install single lite craftsman style door, applicant amends application to use HC-80 Bleeker Beige for siding color, HARB added stipulation to install a 6 lite craftsman style door; ***motion to approve application with stipulation made by J. Maguire, and seconded by T. Amick, all members present voting yes.***

DRAFT

Old Business
None

New Business
None

Committee Reports
None

Zoning Inspection Status Report
None

Legal Guidance
M. Jacobi reminded HARB to adopt Speakers Rules.

Administrative Approvals
N. Lamb reported one (1) administrative approval, which was a like for like repair.

Public Input
Kellie Alexander of 1336 Chesapeake Avenue advocated that the applicants of 1400 Chesapeake Avenue find proper replacement boards for their porch floor.

ADJOURNMENT: The regular meeting adjourned at 7:47 p.m.

MEETING MINUTES APPROVED: _____

DRAFT

1121 Rodgers Street

City of Chesapeake
Department of Planning

Record Summary for Certificate of Appropriateness

Record Detail Information

Record Type: Certificate of Appropriateness

Record Status: Open

File Date: July 29, 2020

Record Number: PLN-CAPP-2020-088

Expiration Date:

Description:

Applying for:
Architect asphalt shingles on main A
Metal roof on porch
Removing rear chimney, keeping from chimney.

Record Name: 1121 Rodgers

Parent Record Number:

Address: 1121 RODGERS ST, CHESAPEAKE, VA 23324

Owner Information

Primary	Owner Name	Owner Address	Owner Phone
Yes	CAB HOMES INC	3537 BALLAHACK RD, CHESAPEAKE, VA 23322 287	

Parcel Information

Parcel No:
1270000004810

Contact Information

Name	Organization Name	Contact Type	Phone
andy brock	1976	Applicant	[redacted]

Address
3537 Ballahack Road, chesapeake, VA 23322

Application Specific Information

NATURE OF THE APPLICATION

Description	Architect asphalt shingles on main A Metal roof on porch Removing rear chimney, keeping from chimney.
Zoning Sign Off	No
Economic Hardship	No

PLANNING STAFF TO COMPLETE

Application After-the-Fact	-
After-the-Fact Fee Paid	-
Approved Administratively	-
Approving Planner	-
Approval Date	-

Certificate Number	-
See supplemental submittal requirements	-
Board Approved Certificate Number	-
I, _____, hereby grant permission for City Staff & members of the Historic Architectural Review Board to enter my site to view exterior areas related to theis Certificate of Appropriateness Application.	-
Structure Designation	-

GENERAL INFORMATION

Year Structure Built	1920
Is this an After-the-Fact application?	No
$250 After the Fact fee, if required.	UNCHECKED
One original delivered to the Planning Department OR a copy attached to the on-line application	UNCHECKED
One disk containing all photos OR photos attached to on-line application	CHECKED
? Completed and notarized power of attorney form if the applicant is not the property owner.	UNCHECKED

NEW CONSTRUCTION

Completed application form.	UNCHECKED
Surveyed site plan (including proposed buildings, structure(s), parking, etc.)	UNCHECKED
Front and side elevations	UNCHECKED
Samples	UNCHECKED
Arrangement of proposed exterior lighting.	UNCHECKED
Photographs of the property and adjoining or opposite properties.	UNCHECKED

ADDITIONS TO EXIST. STRUCTURES

Completed application form.	UNCHECKED
Surveyed site plan or city tax map	UNCHECKED
Elevations	UNCHECKED
Photographs of the existing structure and property.	UNCHECKED
Samples, photos, and brochures	UNCHECKED
Arrangement of proposed exterior lighting.	UNCHECKED
Proposed signs with appropriate detail as to character and location.	UNCHECKED

ALTERATIONS OR REPAIRS

Completed application form.	CHECKED
Written description of work to be performed	CHECKED
Photographs of the building/structure.	CHECKED
2 quotes each are required for the following:	UNCHECKED
Photos numerically keyed	UNCHECKED

RELOCATIONS

Completed application form	UNCHECKED
Photographs of the building or structure to be relocated and adjacent properties.	UNCHECKED
Photographs of the premises to which the building or structure will be relocated.	UNCHECKED
Written description of reasons for the relocation and the proposed use of the vacated property.	UNCHECKED

DEMOLITIONS

Completed application form	UNCHECKED
Photographs of the building or structure to be demolished to illustrate its state of disrepair.	UNCHECKED
Written report on condition of building or structure.	UNCHECKED
Written description of work to be performed	UNCHECKED

SPECIAL POWER OF ATTORNEY

Special Power of Attorney attached	UNCHECKED

METAL ROOFS

Explanation	CHECKED
Info required to replace metal roof with metal roof.	CHECKED
Picture	CHECKED
Specification Sheet	CHECKED
Roof color sample	CHECKED
Info required to replace metal roof with architectural shingles.	CHECKED
Quotes	UNCHECKED
Roof color sample (asphalt)	CHECKED

Eynix

ESTIMATE

8/25/2020

INVOICE NO

Scarano Masonary
Nick Scarano
[redacted]

INVOICE TO
CAB Homes Inc

Front Chimney is beyond repair. Flue needs to be replaced. Woud need to remove Chimney and build a new one.

SALESPERSON	JOB	PAYMENT TERMS	DUE DATE
	1121 Rodgers Street		

QUANTITY	DESCRIPTION	UNIT PRICE	LINE TOTAL

Subtotal	9,500.00
Sales Tax	
Total	

INVOICE

JDS Contracting

Joe Stillwell
[redacted]

INVOICE #1012
DATE: SEPTEMBER 23, 2020

TO CAB Homes

SALESPERSON	LOCATION	JOB	JOB#
	Chesapeake	1121 Rodgers	

LINE ITEM	DESCRIPTION	UNIT PRICE	LINE TOTAL
	Replace main A metal roof with Asphalt Architect shingles		4,000.00
	Replace porch roof with black metal roof		3,000.00
		SUBTOTAL	
		SALES TAX	
		TOTAL	7,000.00

THANK YOU FOR YOUR BUSINESS!

KYRO Roofing

ESTIMATE

Kyle Billips
[redacted]

INVOICE # 100
DATE: DATE

TO:
CAB Homes Inc.
3537 Ballahack Road
Chesapeake Va 23322

JOB:
1121 Rodgers Street
Chesapeake VA

COMMENTS OR SPECIAL INSTRUCTIONS:
It's my opinion that the metal roof needs to be removed rather than be painted. The underlayment needs to be replaced in several areas and cannot be saved.

SALESPERSON	P.O. NUMBER	REQUISITIONER	SHIPPED VIA	F.O.B. POINT	TERMS
					Due on receipt

QUANTITY	DESCRIPTION	UNIT PRICE	TOTAL
	Remove metal and replace sheathing (8 spots)	850.00	
	Metal roof on Porch	2,800.00	
	Asphault shingles on top A	3,200.00	
		SUBTOTAL	
		SALES TAX	
		SHIPPING & HANDLING	
		TOTAL DUE	6,850.00

Make all checks payable to 0BKYRO Roofing
If you have any questions concerning this invoice, contact Name, Phone, Email

THANK YOU FOR YOUR BUSINESS!

1123 Park Avenue

Chesapeake VIRGINIA

Application for Certificate of Appropriateness

CHESAPEAKE PLANNING DEPARTMENT

APPLICATION NUMBER: _____
(Assigned by Chesapeake Planning Department)

1. **Address/Location of Project:** 1123 Park Ave, Chesapeake, VA 23324
2. **Year Structure Built (or write "new construction"):** 1914
3. **Applicant(s):** Thomas R. & Sheila T. Byrum
   Address: 1123 Park Ave
   City: Chesapeake State: VA Zip: 23324
   Daytime Phone: [redacted] FAX Number: None Available
   E-mail address: [redacted]
4. **Owner:** (If different from applicant)
   Name: (Same as above)
   Address: _____
   City: _____ State: ____ Zip: _____
   Daytime Phone: _____ FAX Number: _____
   E-mail address: _____

Signature of Applicant/Agent & Date: SL & T Byrum 8-31-2020

5. **Detailed Description of Scope of Work** (add additional typed sheets if necessary):

We need to replace roof on whole house & garage & are having having trim work, roof ceiling etc. repaired. (Copy of contract with Prestige Home Improvement is attached)

Contract Instructions: Prestige Home Improvement agrees to:
1. Remove the existing roofing material up to (2) layers of shingles and Underlayment
2. Install our Lifetime Roofing System including
A. Weather protecting Ice & WATER SEAL
B. Premium Synthetic Underlayment
C. Pre-Cut Starter Strip
D. Lifetime Architectural Shingles in Weathered Wood
E. Premium Ridge Vent
F. Premium Hdr Caps
3. Install new premium vinyl siding as follows:
A. Harvard Slate in DL45 profile (Dutch Lap)
B. Includes foamfold foam insulation underlayment
3. Install PVC coated trim wrap to all applicable Trim boards including decorative pressure boards where possible.
4. Dispose of all work-related debris
* Trim includes gutters, soffits, fascia, trim, porch ceilings, wrap exterior window trim
* Includes replacing roofing siding & trim on detached garage
Dispose of all work-related debris
Lifetime Warranty on labor and materials

TOTAL CONTRACT (Incl. Any Applicable Sales Tax)	$	30,800.00
Deposit with Order	$	10,000.00
BALANCE DUE	$	20,800.00

Terms: ☒ Cash ☐ Financing

On cash jobs you agree to pay 1/2 on order; 1/4 on start; 1/4 on completion.

THE INSTALLATION WILL BEGIN ON OR AROUND 120 DAYS AND WILL BE COMPLETED ON OR ABOUT 150 DAYS. IT IS UNDERSTOOD BY YOU THAT THE FOLLOWING CONTINGENCIES COULD MATERIALLY CHANGE THE ESTIMATED COMPLETION DATE STATED ABOVE: CUSTOMER'S INABILITY TO OBTAIN OR QUALIFY FOR FINANCING; INCLEMENT WEATHER; STRIKES OR OTHER LABOR DISRUPTIONS; NON-AVAILABILITY OF MATERIALS; ACTS OF GOD.

YOU AGREE TO PAY CASH ACCORDING TO THE TERMS ABOVE OR, YOU AGREE TO ALLOW PRESTIGE HOME IMPROVEMENT TO REFER YOUR FINANCING NEEDS TO OTHERS ON YOUR BEHALF. YOU FURTHER AGREE TO ALLOW PRESTIGE HOME IMPROVEMENT TO MAKE CREDIT INQUIRIES IN ORDER TO OBTAIN FINANCING FOR THIS CONTRACT. YOU UNDERSTAND THAT YOU MUST PROVIDE ALL NECESSARY DOCUMENTS TO PRESTIGE HOME IMPROVEMENT OR OTHERS TO PROCESS YOUR LOAN APPLICATION AND YOU UNDERSTAND THAT LOAN APPROVAL CONSTITUTES ACCEPTANCE AND OBLIGATION UNDER THEIR TERMS OF THIS CONTRACT. YOU AGREE TO SIGN ALL DOCUMENTS NECESSARY TO OBTAIN LOAN FUNDING INCLUDING COMPLETION CERTIFICATE UPON SATISFACTORY COMPLETION OF THE WORK. IF YOU CANCEL THIS CONTRACT AFTER THE THIRD BUSINESS DAY YOU WILL BE OBLIGATED TO PAY ANY COSTS PRESTIGE HOME IMPROVEMENT MAY HAVE INCURRED WITH RELATION TO THIS CONTRACT PLUS THE DIFFERENCE BETWEEN THE CONTRACT AND OUR ESTIMATE OF THE ACTUAL COST OF LABOR AND MATERIALS (OUR LOST PROFIT).

THIS INSTRUMENT IS BASED UPON A HOME SOLICITATION SALE, WHICH SALE IS SUBJECT TO THE PROVISIONS OF THE HOME SOLICITATION SALES ACT. THIS INSTRUMENT IS NOT NEGOTIABLE.

YOU, THE BUYER, MAY CANCEL THIS TRANSACTION AT ANY TIME PRIOR TO MIDNIGHT OF THE THIRD BUSINESS DAY AFTER THE DATE OF THIS TRANSACTION, SEE THE ATTACHED NOTICE OF CANCELLATION FORM FOR AN EXPLANATION OF THIS RIGHT.

BY SIGNING BELOW, YOU ACKNOWLEDGE THAT YOU OWN THE ABOVE PROPERTY AND THAT YOU AGREE TO ALL OF THE TERMS OF THIS CONTRACT. YOU ALSO ACKNOWLEDGE THAT YOU HAVE BEEN ORALLY INFORMED OF YOUR RIGHT TO CANCEL.

THIS CONTRACT IS SUBJECT TO FINAL APPROVAL OF PRESTIGE HOME IMPROVEMENT MANAGEMENT AND PRESTIGE HOME IMPROVEMENT RESERVES THE RIGHT TO CANCEL THIS CONTRACT WITHIN 10 BUSINESS DAYS OF THE CONTRACT DATE.

* Project contingent on city approval

Date: 9/3/2020 Customer: [signature]

Salesman: ZACK REDDICK Customer: [signature]

NOTICE OF CANCELLATION

YOU MAY CANCEL THIS TRANSACTION, WITHOUT ANY PENALTY OR OBLIGATION, WITHIN THREE BUSINESS DAYS FROM THE ABOVE DATE.

IF YOU CANCEL, ANY PROPERTY TRADED IN, ANY PAYMENTS MADE BY YOU UNDER THE CONTRACT OR SALE, AND ANY NEGOTIABLE INSTRUMENT EXECUTED BY YOU WILL BE RETURNED WITHIN 10 BUSINESS DAYS FOLLOWING RECEIPT BY THE SELLER OF YOU CANCELLATION NOTICE, AND ANY SECURITY INTEREST ARISING OUT OF THE TRANSACTION WILL BE CANCELLED.

IF YOU CANCEL, YOU MUST MAKE AVAILABLE TO THE SELLER AT YOUR RESIDENCE, IN SUBSTANTIALLY AS GOOD CONDITION AS WHEN RECEIVED, ANY GOODS DELIVERED TO YOU UNDER THIS CONTRACT OR SALE: OR YOU MAY COMPLY WITH THE INSTRUCTIONS OF THE SELLER REGARDING THE RETURN SHIPMENT OF THE GOODS AT THE SELLER'S EXPENSE AND RISK.

IF YOU DO MAKE THE GOODS AVAILABLE TO THE SELLER AND THE SELLER DOES NOT PICK THEM UP WITHIN 20 DAYS OF YOUR NOTICE OF CANCELLATION, YOU MAY RETAIN OR DISPOSE OF THE GOODS WITHOUT ANY FURTHER OBLIGATION. IF YOU FAIL TO MAKE THE GOODS AVAILABLE TO THE SELLER, OR IF YOU AGREE TO RETURN THE GOODS TO THE SELLER AND FAIL TO DO SO, THEN YOU REMAIN LIABLE FOR PERFORMANCE OF ALL OBLIGATIONS UNDER THE CONTRACT.

TO CANCEL THIS TRANSACTION, MAIL OR DELIVER A SIGNED AND DATED COPY OF THIS CANCELLATION NOTICE OR ANY OTHER WRITTEN NOTICE, OR SEND A TELEGRAM, TO: PRESTIGE HOME IMPROVEMENT, 4857 DOLTON DRIVE, VIRGINIA BEACH, VA 23462 (757) 499-5037 NO LATER THAN MIDNIGHT OF:

9/6/2020
Date

I HEREBY CANCEL THIS TRANSACTION.

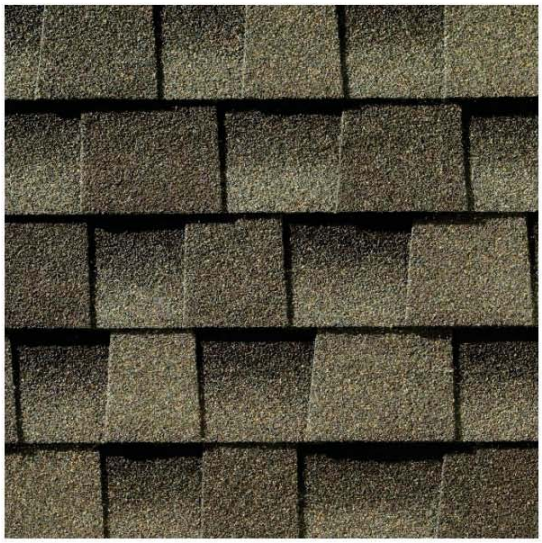

GAF > View the Collection

Timberline HD Weathered Wood Lifetime Architectural Shingles (33.3 sq. ft. per Bundle)

★★★★★ (4669) Write a Review Questions & Answers (139)

- Architectural asphalt shingles covered by Lifetime Ltd. Warranty
- Enhanced shadow effect for a genuine wood shake look
- Class A fire rating & 130 mph wind warranty provide peace of mind

Save up to $100* on your qualifying purchase.
Apply for a Home Depot Consumer Card

We had some trouble loading your options.
Select any option to get started.

How to Get It

Store Pickup | Ship to Home | Scheduled Delivery

1218 Jackson Avenue

City of Chesapeake
Department of Planning

Record Summary for Certificate of Appropriateness

Record Detail Information

Record Type: Certificate of Appropriateness

Record Status: Open

File Date: September 22, 2020

Record Number: PLN-CAPP-2020-100

Expiration Date:

Description:

Record Name: 1218 Jackson Ave

Request to pour a solid concrete driveway to replace the existing ribbon driveway. The ribbon driveway is not functional, is cracked & broken & is too narrow to accomodate today's vehicles. There are permanent tire ruts on both sides of the concrete ribbons resulting from vehicles that are too wide for the ribbons. I hope the new driveway/grading will alleviate the garage from flooding every time it rains. Attached are pictures of whole driveways in my neighborhood as well as pictures of the tire rugs & previous flooding. There is a third house on the corner of Jackson Ave with a solid drive way but I could not take a picture of it because the fence was closed.

Parent Record Number:

Address: 1218 JACKSON AVE, CHESAPEAKE, VA 23324

Owner Information

Primary	Owner Name	Owner Address	Owner Phone
Yes	THOMPSON SARA E	1218 JACKSON AVE, CHESAPEAKE, VA 23324 230	

Parcel Information

Parcel No:
1270000004970

Contact Information

Name	Organization Name	Contact Type	Phone
sara thompson		Applicant	-

Address
1218 jackson ave, chesapeake, VA 23324

Application Specific Information

NATURE OF THE APPLICATION

Description	Replace existing concrete ribbon driveway with a solid concrete driveway.
Zoning Sign Off	No
Economic Hardship	No

PLANNING STAFF TO COMPLETE

Application After-the-Fact	-
After-the-Fact Fee Paid	-
Approved Administratively	-

Approving Planner	-
Approval Date	-
Certificate Number	-
See supplemental submittal requirements	-
Board Approved Certificate Number	-
I, _____, hereby grant permission for City Staff & members of the Historic Architectural Review Board to enter my site to view exterior areas related to theis Certificate of Appropriateness Application.	-
Structure Designation	-

GENERAL INFORMATION

Year Structure Built	1927
Is this an After-the-Fact application?	No
$250 After the Fact fee, if required.	UNCHECKED
One original delivered to the Planning Department OR a copy attached to the on-line application	UNCHECKED
One disk containing all photos OR photos attached to on-line application	CHECKED
? Completed and notarized power of attorney form if the applicant is not the property owner.	UNCHECKED

NEW CONSTRUCTION

Completed application form.	UNCHECKED
Surveyed site plan (including proposed buildings, structure(s), parking, etc.)	UNCHECKED
Front and side elevations	UNCHECKED
Samples	UNCHECKED
Arrangement of proposed exterior lighting.	UNCHECKED
Photographs of the property and adjoining or opposite properties.	UNCHECKED

ADDITIONS TO EXIST. STRUCTURES

Completed application form.	UNCHECKED
Surveyed site plan or city tax map	UNCHECKED
Elevations	UNCHECKED
Photographs of the existing structure and property.	UNCHECKED
Samples, photos, and brochures	UNCHECKED
Arrangement of proposed exterior lighting.	UNCHECKED
Proposed signs with appropriate detail as to character and location.	UNCHECKED

ALTERATIONS OR REPAIRS

Completed application form.	CHECKED
Written description of work to be performed	CHECKED
Photographs of the building/structure.	CHECKED
2 quotes each are required for the following:	UNCHECKED

Photos numerically keyed	UNCHECKED

RELOCATIONS

Completed application form	UNCHECKED
Photographs of the building or structure to be relocated and adjacent properties.	UNCHECKED
Photographs of the premises to which the building or structure will be relocated.	UNCHECKED
Written description of reasons for the relocation and the proposed use of the vacated property.	UNCHECKED

DEMOLITIONS

Completed application form	UNCHECKED
Photographs of the building or structure to be demolished to illustrate its state of disrepair.	UNCHECKED
Written report on condition of building or structure.	UNCHECKED
Written description of work to be performed	UNCHECKED

SPECIAL POWER OF ATTORNEY

Special Power of Attorney attached	UNCHECKED

METAL ROOFS

Explanation	UNCHECKED
Info required to replace metal roof with metal roof.	UNCHECKED
Picture	UNCHECKED
Specification Sheet	UNCHECKED
Roof color sample	UNCHECKED
Info required to replace metal roof with architectural shingles.	UNCHECKED
Quotes	UNCHECKED
Roof color sample (asphalt)	UNCHECKED

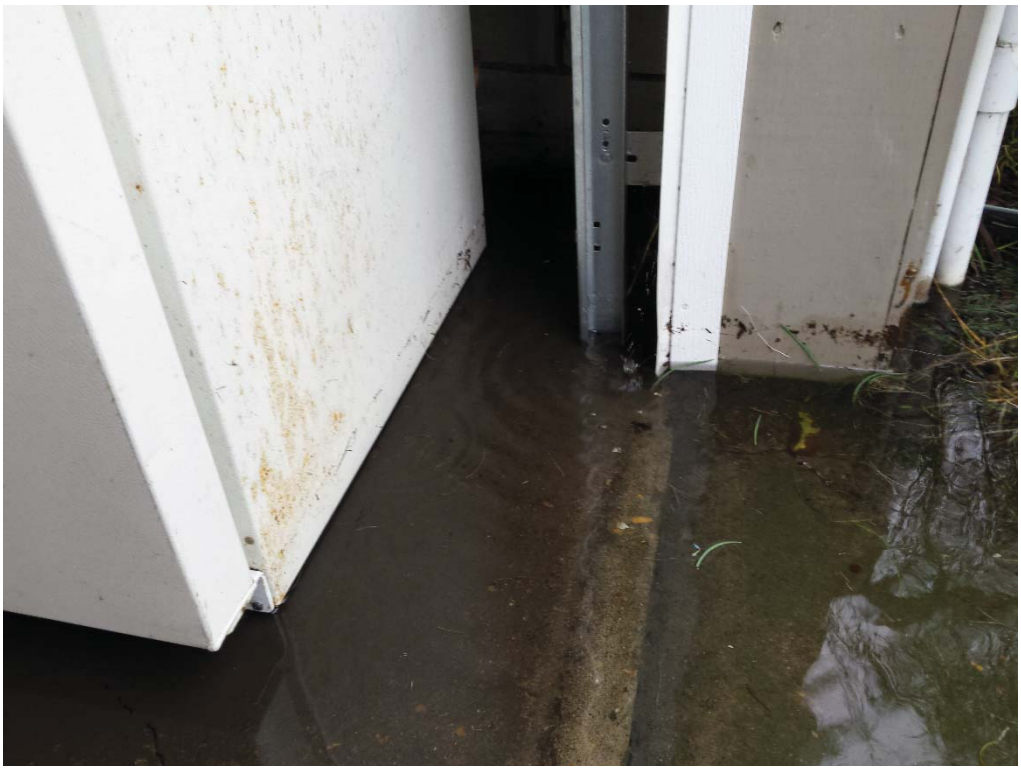

GROW
CLEAN

KEC-3530

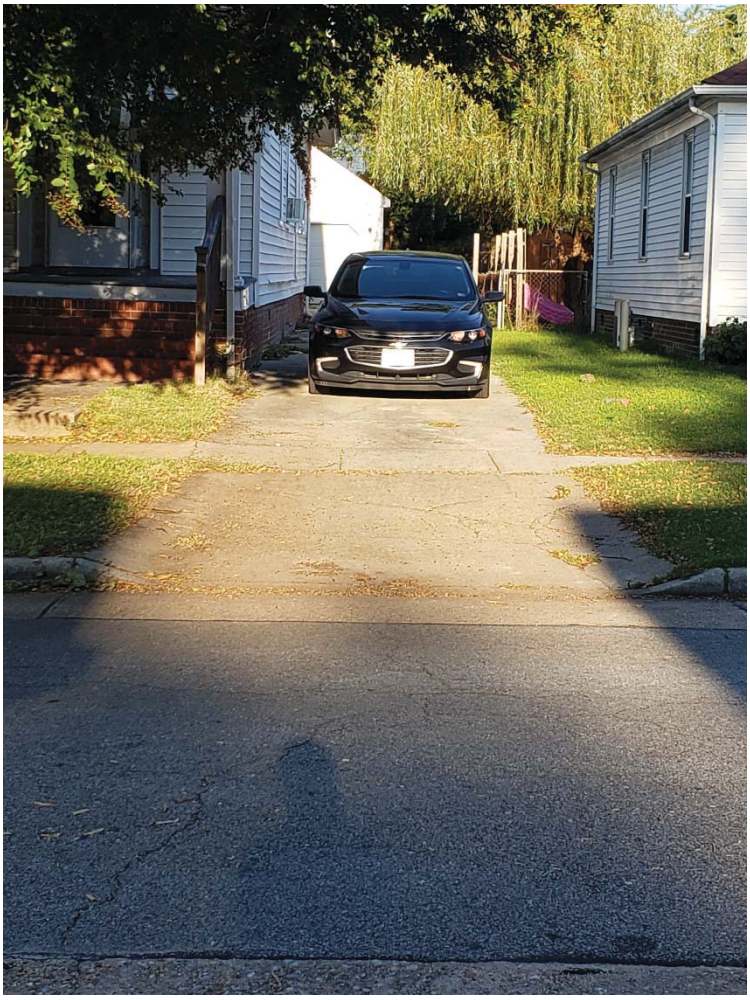

1125 Decatur Street

City of Chesapeake
Department of Planning

Record Summary for Certificate of Appropriateness

Record Detail Information

Record Type: Certificate of Appropriateness

Record Status: Open

File Date: September 24, 2020

Record Number: PLN-CAPP-2020-101

Expiration Date:

Description:
Request for Certificate of Appropriateness for roof-mounted solar panels

Record Name: 1125 Decatur St

Parent Record Number:

Address: 1125 DECATUR ST, CHESAPEAKE, VA 23324

Owner Information

Primary	Owner Name	Owner Address	Owner Phone
Yes	WONG HERMAN & SARA	1125 DECATUR ST, CHESAPEAKE, VA 23324 233	

Parcel Information

Parcel No:
1270000004140

Contact Information

Name	Organization Name	Contact Type	Phone
CHAD WILKINS	CONVERT SOLAR	Applicant	[redacted]

Address
2245 LEEWARD SHORE CT, VIRGINIA BEACH, VA 23451

Application Specific Information

NATURE OF THE APPLICATION

Description	Request for Certificate of Appropriateness required for permitting for roof-mounted solar panels
Zoning Sign Off	No
Economic Hardship	No

PLANNING STAFF TO COMPLETE

Application After-the-Fact	-
After-the-Fact Fee Paid	-
Approved Administratively	-
Approving Planner	-
Approval Date	-
Certificate Number	-
See supplemental submittal requirements	-

Board Approved Certificate Number	-
I, _____, hereby grant permission for City Staff & members of the Historic Architectural Review Board to enter my site to view exterior areas related to theis Certificate of Appropriateness Application.	-
Structure Designation	-

GENERAL INFORMATION

Year Structure Built	1916
Is this an After-the-Fact application?	No
$250 After the Fact fee, if required.	UNCHECKED
One original delivered to the Planning Department OR a copy attached to the on-line application	CHECKED
One disk containing all photos OR photos attached to on-line application	UNCHECKED
? Completed and notarized power of attorney form if the applicant is not the property owner.	UNCHECKED

NEW CONSTRUCTION

Completed application form.	UNCHECKED
Surveyed site plan (including proposed buildings, structure(s), parking, etc.)	UNCHECKED
Front and side elevations	UNCHECKED
Samples	UNCHECKED
Arrangement of proposed exterior lighting.	UNCHECKED
Photographs of the property and adjoining or opposite properties.	UNCHECKED

ADDITIONS TO EXIST. STRUCTURES

Completed application form.	UNCHECKED
Surveyed site plan or city tax map	UNCHECKED
Elevations	UNCHECKED
Photographs of the existing structure and property.	UNCHECKED
Samples, photos, and brochures	UNCHECKED
Arrangement of proposed exterior lighting.	UNCHECKED
Proposed signs with appropriate detail as to character and location.	UNCHECKED

ALTERATIONS OR REPAIRS

Completed application form.	UNCHECKED
Written description of work to be performed	CHECKED
Photographs of the building/structure.	UNCHECKED
2 quotes each are required for the following:	UNCHECKED
Photos numerically keyed	UNCHECKED

RELOCATIONS

Completed application form	UNCHECKED

Photographs of the building or structure to be relocated and adjacent properties.	UNCHECKED
Photographs of the premises to which the building or structure will be relocated.	UNCHECKED
Written description of reasons for the relocation and the proposed use of the vacated property.	UNCHECKED

DEMOLITIONS

Completed application form	UNCHECKED
Photographs of the building or structure to be demolished to illustrate its state of disrepair.	UNCHECKED
Written report on condition of building or structure.	UNCHECKED
Written description of work to be performed	UNCHECKED

SPECIAL POWER OF ATTORNEY

Special Power of Attorney attached	UNCHECKED

METAL ROOFS

Explanation	UNCHECKED
Info required to replace metal roof with metal roof.	UNCHECKED
Picture	UNCHECKED
Specification Sheet	UNCHECKED
Roof color sample	UNCHECKED
Info required to replace metal roof with architectural shingles.	UNCHECKED
Quotes	UNCHECKED
Roof color sample (asphalt)	UNCHECKED

FOR SALE

DIRECTORY OF PAGES

PV-1	PROJECT SUMMARY
PV-2	SITE PLAN
PV-3	SINGLE-LINE DIAGRAM
PV-4	SAFETY LABELS
PV-5.1	ATTACHMENT PLAN 5.1
PV-5.2	ATTACHMENT PLAN 5.2
PV-5.3	ATTACHMENT PLAN 5.3
PV-5.4	ATTACHMENT PLAN 5.4
PV-5.5	ATTACHMENT PLAN 5.5
PV-5.6	ATTACHMENT PLAN 5.6
PV-6	ATTACHMENT DETAILS
PV-7	FIRE SAFETY PLAN
APPENDIX	MODULE DATASHEET
	OPTIMIZER DATASHEET
	ARRAY WIRING BOX DATASHEET
	INVERTER DATASHEET
	MOUNTING SYSTEM DATASHEET
	MOUNTING SYSTEM ENGINEERING LETTER
	UL 2703 GROUND AND BONDING CERTIFICATION
	ANCHOR DATASHEET

PROJECT DETAILS

PROPERTY OWNER	HERMAN WONG
PROPERTY ADDRESS	1125 DECATUR ST, CHESAPEAKE, VA 23324 US
ZONING	RESIDENTIAL
USE AND OCCUPANCY CLASSIFICATION	ONE- OR TWO-FAMILY DWELLING GROUP (GROUP R3)
AHJ	CITY OF CHESAPEAKE
UTILITY COMPANY	DOMINION VIRGINIA POWER
ELECTRICAL CODE	2014 NEC (NFPA 70)
FIRE CODE	2015 IFC
OTHER BUILDING CODES	2015 VA CONSTRUCTION CODE 2015 VA RESIDENTIAL CODE 2015 VA PLUMBING CODE 2015 VA MECHANICAL CODE

CONTRACTOR INFORMATION

COMPANY	CONVERT SOLAR
LICENSE NUMBER	2705151260 (A AES ELE)
ADDRESS	5825 WARD CT, VIRGINIA BEACH, VA 23455
PHONE NUMBER	[redacted]
CONTRACTOR SIGNATURE	

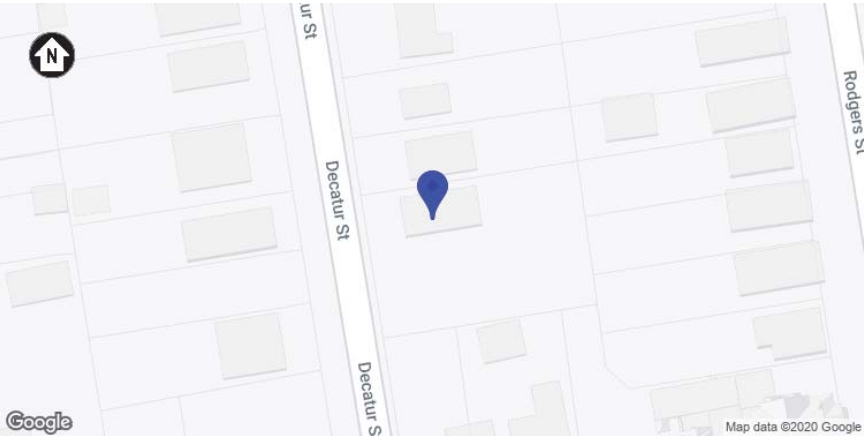

1 PV-1 PLOT
SCALE: NTS

2 PV-1 LOCALE
SCALE: NTS

SCOPE OF WORK

THIS PROJECT INVOLVES THE INSTALLATION OF A PHOTOVOLTAIC POWER SYSTEM. SOLAR PANELS WILL BE RACKED USING A PREENGINEERED RACKING SYSTEM. THE RACKED MODULES WILL BE ELECTRICALLY CONNECTED WITH DC TO AC POWER INVERTERS AND INTERCONNECTED TO THE LOCAL UTILITY USING MEANS AND METHODS CONSISTENT WITH THE RULES ENFORCED BY THE LOCAL UTILITY AND PERMITTING JURISDICTION.

THIS DOCUMENT HAS BEEN PREPARED FOR THE PURPOSE OF DESCRIBING THE DESIGN OF A PROPOSED PV SYSTEM WITH ENOUGH DETAIL TO DEMONSTRATE COMPLIANCE WITH APPLICABLE CODES AND REGULATIONS. THE DOCUMENT SHALL NOT BE RELIED UPON AS A SUBSTITUTE FOR FOLLOWING MANUFACTURER INSTALLATION INSTRUCTIONS. THE SYSTEM SHALL COMPLY WITH ALL MANUFACTURERS LISTING AND INSTALLATION INSTRUCTIONS, AS WELL AS ALL APPLICABLE CODES. NOTHING IN THIS DOCUMENT SHALL BE INTERPRETED IN A WAY THAT OVERRIDES THEM. CONTRACTOR IS RESPONSIBLE FOR VERIFICATION OF ALL CONDITIONS, DIMENSIONS, AND DETAILS IN THIS DOCUMENT.

SYSTEM DETAILS

DESCRIPTION	NEW GRID-INTERACTIVE PHOTOVOLTAIC SYSTEM WITH NO BATTERY STORAGE
DC RATING OF SYSTEM	5.78KW
AC RATING OF SYSTEM	6.00KW
AC OUTPUT CURRENT	25.0A
INVERTER(S)	1 X SOLAR EDGE SE6000H-US000BXX4
MODULE	Q-CELLS Q.PEAK DUO BLK-G6 340
ARRAY WIRING	(1) STRING OF 8 (1) STRING OF 9

INTERCONNECTION DETAILS

POINT OF CONNECTION	NEW SUPPLY SIDE AC CONNECTION PER NEC 705.12(A)
UTILITY SERVICE	120/240V 1Φ
LOCATION	INSIDE PANELBOARD, PROTECTED BY FUSED SQUARE D D222NRB, 2-POLE, 60A, 240VAC

SITE DETAILS

ASHRAE EXTREME LOW	-9°C (16°F)
ASHRAE 2% HIGH	34°C (93°F)
CLIMATE DATA SOURCE	NORFOLK NAS (KNGU)
WIND SPEED	117 MPH (ASCE7-10)
RISK CATEGORY	II
WIND EXPOSURE CATEGORY	C
GROUND SNOW LOAD	10 PSF

P-143812

GRID-TIED SOLAR POWER SYSTEM

WONG RESIDENCE
1125 DECATUR ST
CHESAPEAKE, VA 23324

PROJECT SUMMARY

DOC ID: 143812-177800-0
DATE: 8/31/20
CREATOR: C.W.
REVIEWER: D.K.

REVISIONS

PV-1

1 PV-2 SITE PLAN
SCALE: 1" = 10'

GENERAL NOTES	
1	EQUIPMENT LIKELY TO BE WORKED UPON WHILE ENERGIZED SHALL BE INSTALLED IN LOCATIONS THAT SATISFY MINIMUM WORKING CLEARANCES PER NEC 110.26.
2	CONTRACTOR SHALL USE ONLY COMPONENTS LISTED BY A NATIONALLY RECOGNIZED TESTING LABORATORY FOR THE INTENDED USE.
3	CONTRACTOR IS RESPONSIBLE FOR FURNISHING ALL EQUIPMENT, CABLES, ADDITIONAL CONDUITS, RACEWAYS, AND OTHER ACCESSORIES NECESSARY FOR A COMPLETE AND OPERATIONAL PV SYSTEM.
4	WHERE DC PV SOURCE OR DC PV OUTPUT CIRCUITS ARE RUN INSIDE THE BUILDING, THEY SHALL BE CONTAINED IN METAL RACEWAYS, TYPE MC METAL-CLAD CABLE, OR METAL ENCLOSURES FROM THE POINT OF PENETRATION INTO THE BUILDING TO THE FIRST READILY ACCESSIBLE DISCONNECTING MEANS, PER NEC 690.31(G).
5	ALL EMT CONDUIT FITTINGS SHALL BE LISTED AS WEATHERPROOF FITTINGS AND INSTALLED TO ENSURE A RAINTIGHT FIT, PER NEC 358.42.

1. (N) PROPOSED ROOF-MOUNTED PHOTOVOLTAIC ARRAY. 4:12 (18°) SLOPED ROOF, 2 PV MODULES (BLACK FRAME, BLACK BACKSHEET), 170° AZIMUTH
2. (N) PROPOSED ROOF-MOUNTED PHOTOVOLTAIC ARRAY. 4:12 (18°) SLOPED ROOF, 2 PV MODULES (BLACK FRAME, BLACK BACKSHEET), 248° AZIMUTH
3. (N) PROPOSED ROOF-MOUNTED PHOTOVOLTAIC ARRAY. 4:12 (18°) SLOPED ROOF, 6 PV MODULES (BLACK FRAME, BLACK BACKSHEET), 170° AZIMUTH
4. (E) MAIN SERVICE PANEL (MSP), OUTDOOR
5. (N) TRANSITION BOX (JB1), OUTDOOR , OUTPUT CIRCUIT CONDUCTORS SHALL BE RUN IN LFMC CONDUIT THROUGH THE INTERIOR OF THE BUILDING
6. (E) UTILITY METER, OUTDOOR
7. (N) PROPOSED ROOF-MOUNTED PHOTOVOLTAIC ARRAY. 4:12 (18°) SLOPED ROOF, 2 PV MODULES (BLACK FRAME, BLACK BACKSHEET), 170° AZIMUTH
8. (N) PROPOSED ROOF-MOUNTED PHOTOVOLTAIC ARRAY. 4:12 (18°) SLOPED ROOF, 2 PV MODULES (BLACK FRAME, BLACK BACKSHEET), 82° AZIMUTH
9. (N) INVERTER (I1), OUTDOOR
10. (N) VISIBLE, LOCKABLE, LABELED AC DISCONNECT LOCATED WITHIN 10 FT OF UTILITY METER (SW1), OUTDOOR
11. (N) PROPOSED ROOF-MOUNTED PHOTOVOLTAIC ARRAY. 4:12 (18°) SLOPED ROOF, 3 PV MODULES (BLACK FRAME, BLACK BACKSHEET), 265° AZIMUTH
12. ALL ARRAY CIRCUITS SHALL BE ROUTED THROUGH THE INTERIOR OF THE BUILDING, AND WHERE POSSIBLE, ALONG THE BOTTOM OF LOAD BEARING MEMBERS. NO CONDUIT SHALL BE INSTALLED ABOVE THE ROOF.

P-143812

GRID-TIED SOLAR POWER SYSTEM

WONG RESIDENCE
1125 DECATUR ST
CHESAPEAKE, VA 23324

SITE PLAN

DOC ID: 143812-177800-0
DATE: 8/31/20
CREATOR: C.W.
REVIEWER: D.K.

REVISIONS

PV-2

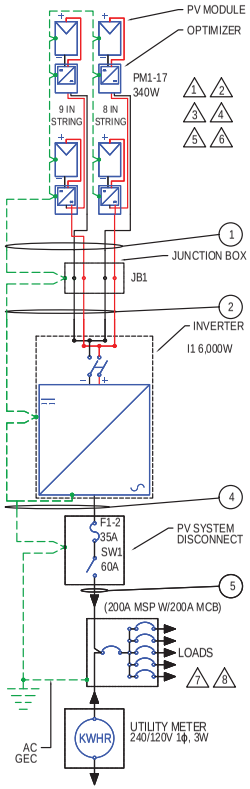

MODULES

REF.	QTY.	MAKE AND MODEL	PMAX	PTC	ISC	IMP	VOC	VMP	TEMP. COEFF. OF VOC	FUSE RATING
PM1-17	17	Q-CELLS Q.PEAK DUO BLK-G6 340	340W	318W	10.52A	10.02A	40.7V	33.9V	-0.11V/°C (-0.27%/°C)	20A

INVERTERS

REF.	QTY.	MAKE AND MODEL	AC VOLTAGE	GROUND	MAX OCPD RATING	RATED POWER	MAX OUTPUT CURRENT	MAX INPUT CURRENT	MAX INPUT VOLTAGE	CEC WEIGHTED EFFICIENCY
I1	1	SOLAR EDGE SE6000H-US [240V]	240V	UNGROUNDED	40A	6,000W	25.0A	16.5A	480V	99.0%

POWER OPTIMIZERS

REF.	QTY.	MODEL	RATED INPUT POWER	MAX OUTPUT CURRENT	MAX INPUT ISC	MAX DC VOLTAGE	WEIGHTED EFFICIENCY
PO1-17	17	SOLAR EDGE P340	340W	15A	11.0A	48V	98.8%

PASS-THRU BOXES AND COMBINERS

REF.	QTY.	MAKE AND MODEL	RATED CURRENT	MAX RATED VOLTAGE
JB1	1	SOLADECK 0783-3R-4ER6 OR EQUIV.	30A	600VDC

DISCONNECTS

REF.	QTY.	MAKE AND MODEL	RATED CURRENT	MAX RATED VOLTAGE
SW1	1	SQUARE D D222NRB OR EQUIV.	60A	240VAC

OCPDS

REF.	QTY.	RATED CURRENT	MAX VOLTAGE
F1-2	2	35A	240VAC

SYSTEM SUMMARY

	STRING 1	STRING 2
OPTIMIZER MAX OUTPUT CURRENT	15A	15A
OPTIMIZERS IN SERIES	9	8
NOMINAL STRING VOLTAGE	380V	380V
ARRAY OPERATING CURRENT	8.1A	7.2A
ARRAY STC POWER	5,780W	
ARRAY PTC POWER	5,412W	
MAX AC CURRENT	25A	
MAX AC POWER OUTPUT	6,000W	
DERATED AC POWER OUTPUT	5,293W	

NOTES

1. SOLAR EDGE SYSTEM MEETS REQUIREMENTS FOR PHOTOVOLTAIC RAPID SHUTDOWN SYSTEM (PVRSS), AS PER NEC 690.12.
2. MATING CONNECTORS SHALL COMPLY WITH NEC 690.17(E).
3. THE SPECIFIED OPTIMIZER CAN BE SUBSTITUTED WITH A P370 OR P505. THESE OPTIMIZERS HAVE AN INPUT VOLTAGE WINDOW WIDE ENOUGH TO ACCOMMODATE THE OUTPUT VOLTAGE RANGE OF THE MODULE AT THE DESIGN TEMPERATURES, HAVE A MAX INPUT CURRENT RATING THAT IS ABOVE THE MAX OUTPUT CURRENT OF THE MODULE, AND A MAX POWER INPUT THAT IS ABOVE THE RATED POWER OUTPUT OF THE MODULE.
4. UNGROUNDED SYSTEM DC CONDUCTORS SHALL BE COLOR-CODED AS FOLLOWS. DC POSITIVE SHALL BE RED (OR MARKED RED) AND DC NEGATIVE SHALL BE BLACK (OR MARKED BLACK)
5. ALL METAL ENCLOSURES, RACEWAYS, CABLES AND EXPOSED NONCURRENT-CARRYING METAL PARTS OF EQUIPMENT SHALL BE GROUNDED TO EARTH AS REQUIRED BY NEC 250.4(B) AND PART III OF ARTICLE 250 AND EQUIPMENT GROUNDING CONDUCTORS SHALL BE SIZED ACCORDING TO NEC 690.45(A). THE GROUNDING ELECTRODE SYSTEM SHALL ADHERE TO NEC 690.47 AND NEC 250.169. THE DC GROUNDING ELECTRODE SHALL BE SIZED ACCORDING TO NEC 250.166 AND INSTALLED IN COMPLIANCE WITH NEC 250.64.
6. MAX DC VOLTAGE OF ARRAY FIXED BY THE INVERTER AT 380V REGARDLESS OF TEMPERATURE. THE MAX DC VOLTAGE OF THE MODULE AT -9°C IS EXPECTED TO BE 44.4V (-9°C - 25°C) X -0.11V/C + 40.66V = 44.4V).
7. PV SYSTEM DISCONNECT SHALL BE A VISIBLE KNIFE-BLADE TYPE DISCONNECT THAT IS ACCESSIBLE AND LOCKABLE BY THE UTILITY. THE DISCONNECT SHALL BE LOCATED WITHIN 10 FT OF UTILITY METER. DISCONNECT SHALL BE GROUPED IN ACCORDANCE WITH NEC 230.72.
8. POINT-OF-CONNECTION IS ON THE SUPPLY SIDE OF SERVICE DISCONNECT, INSIDE PANELBOARD ENCLOSURE USING UNUSED TERMINALS, TERMINALS THAT ARE SUITABLE FOR DOUBLE LUGGING, OR USING OTHER LOCALLY-APPROVED METHODS AND HARDWARE, IN COMPLIANCE WITH NEC 705.12(A). THE PANELBOARD SHALL HAVE SUFFICIENT SPACE TO ALLOW FOR ANY TAP HARDWARE AS REQUIRED BY NEC 110.3 AND NEC 312.8

CONDUCTOR AND CONDUIT SCHEDULE W/ELECTRICAL CALCULATIONS

ID	TYPICAL	CONDUCTOR	CONDUIT / CABLE	CURRENT-CARRYING CONDUCTORS IN CONDUIT / CABLE	OCPD	EGC	TEMP. CORR. FACTOR	FILL FACTOR	CONT. CURRENT	MAX. CURRENT (125%)	BASE AMP.	DERATED AMP.	TERM. TEMP. RATING	AMP. @ TERM. TEMP. RATING
1	1	10 AWG PV WIRE, COPPER	FREE AIR	N/A	N/A	6 AWG BARE, COPPER	0.71 (56°C)	1.0	15A	18.75A	55A	39.05A	75°C	50A
2	1	10 AWG THWN-2, COPPER	0.75" DIA. LFMC	4	N/A	10 AWG THWN-2, COPPER	0.76 (54°C)	0.8	15A	18.75A	40A	24.32A	90°C	40A
3	1	10 AWG PV WIRE, COPPER	FREE AIR	N/A	N/A	6 AWG BARE, COPPER	0.71 (56°C)	1.0	15A	18.75A	55A	39.05A	75°C	50A
4	1	6 AWG THWN-2, COPPER	0.5" DIA. LFMC	2	N/A	8 AWG THWN-2, COPPER	0.96 (34°C)	1.0	25A	31.25A	55A	52.8A	75°C	50A
5	1	6 AWG THWN-2, COPPER	0.75" DIA. EMT	2	35A X 2	8 AWG THWN-2, COPPER	0.96 (34°C)	1.0	25A	31.25A	75A	72A	75°C	65A

GENERAL ELECTRICAL NOTES

1. UTILITY HAS 24-HR UNRESTRICTED ACCESS TO ALL PHOTOVOLTAIC SYSTEM COMPONENTS LOCATED AT THE SERVICE ENTRANCE.
2. MODULES CONFORM TO AND ARE LISTED UNDER UL 1703.
3. CONDUCTORS EXPOSED TO SUNLIGHT SHALL BE LISTED AS SUNLIGHT RESISTANT PER NEC ARTICLE 300.6 (C) (1) AND ARTICLE 310.10 (D).
4. CONDUCTORS EXPOSED TO WET LOCATIONS SHALL BE SUITABLE FOR USE IN WET LOCATIONS PER NEC ARTICLE 310.10 (C).

GROUNDING NOTES

1. ALL EQUIPMENT SHALL BE PROPERLY GROUNDED PER THE REQUIREMENTS OF NEC ARTICLES 250 & 690
2. PV MODULES SHALL BE GROUNDED TO MOUNTING RAILS USING MODULE LUGS OR RACKING INTEGRATED GROUNDING CLAMPS AS ALLOWED BY LOCAL JURISDICTION. ALL OTHER EXPOSED METAL PARTS SHALL BE GROUNDED USING UL-LISTED LAY-IN LUGS.
3. INSTALLER SHALL CONFIRM THAT MOUNTING SYSTEM HAS BEEN EVALUATED FOR COMPLIANCE WITH UL 2703 "GROUNDING AND BONDING" WHEN USED WITH PROPOSED PV MODULE.
4. ALL GROUNDING SYSTEM COMPONENTS SHALL BE LISTED FOR THEIR PURPOSE
5. IF THE EXISTING MAIN SERVICE PANEL DOES NOT HAVE A VERIFIABLE GROUNDING ELECTRODE, IT IS THE CONTRACTOR'S RESPONSIBILITY TO INSTALL A SUPPLEMENTAL GROUNDING ELECTRODE.
6. AC SYSTEM GROUNDING ELECTRODE CONDUCTOR (GEC) SHALL BE A MINIMUM SIZE #8AWG WHEN INSULATED, #6AWG IF BARE WIRE.
7. EQUIPMENT GROUNDING CONDUCTORS SHALL BE SIZED ACCORDING TO NEC ARTICLE 690.45, AND BE A MINIMUM OF #10AWG WHEN NOT EXPOSED TO DAMAGE, AND #6AWG SHALL BE USED WHEN EXPOSED TO DAMAGE
8. GROUNDING AND BONDING CONDUCTORS, IF INSULATED, SHALL BE COLOR CODED GREEN, OR MARKED GREEN IF #4AWG OR LARGER

1 / PV-3 SINGLE-LINE DIAGRAM
SCALE: NTS

P-143812

GRID-TIED SOLAR POWER SYSTEM

WONG RESIDENCE
1125 DECATUR ST
CHESAPEAKE, VA 23324

SINGLE-LINE DIAGRAM

PROJECT ID:	143812
DATE:	08/31/20
CREATED BY:	C.W.
CHECKED BY:	D.K.

REVISIONS

PV-3

DC RACEWAYS
1

SW1 - DISCONNECT (SQUARE D D222NRB)
1 3

I1 - INVERTER (SOLAR EDGE SE6000H-US)
1 4

MSP - MAIN SERVICE PANEL
1 2

UTILITY METER
2

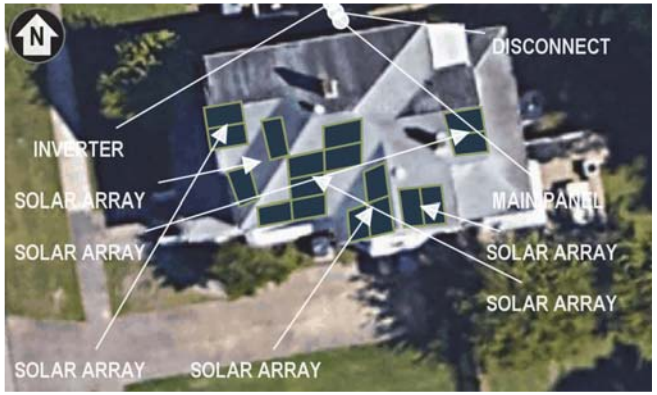

1

WARNING:
PHOTOVOLTAIC POWER SOURCE

2

CAUTION
SOLAR ELECTRIC SYSTEM CONNECTED

3

SOLAR AC DISCONNECT

4

SOLAR DC DISCONNECT

LABELING NOTES	
1	ALL PLAQUES AND SIGNAGE REQUIRED BY 2014 NEC AND 2015 IFC WILL BE INSTALLED AS REQUIRED.
2	LABELS, WARNING(S) AND MARKING SHALL COMPLY WITH ANSI Z535.4, WHICH REQUIRES THAT DANGER, WARNING, AND CAUTION SIGNS USED THE STANDARD HEADER COLORS, HEADER TEXT, AND SAFETY ALERT SYMBOL ON EACH LABEL. THE ANSI STANDARD REQUIRES A HEADING THAT IS AT LEAST 50% TALLER THAN THE BODY TEXT, IN ACCORDANCE WITH NEC 110.21(B).
3	A PERMANENT PLAQUE OR DIRECTORY SHALL BE INSTALLED PROVIDING THE LOCATION OF THE SERVICE DISCONNECTING MEANS AND THE PHOTOVOLTAIC SYSTEM DISCONNECTING MEANS IF NOT IN THE SAME LOCATION IN ACCORDANCE WITH NEC 690.56(B).
4	LABEL(S) WITH MARKING, "WARNING PHOTOVOLTAIC POWER SOURCE," SHALL BE LOCATED AT EVERY 10 FEET OF EACH DC RACEWAY AND WITHIN ONE FOOT OF EVERY TURN OR BEND AND WITHIN ONE FOOT ABOVE AND BELOW ALL PENETRATIONS OF ROOF/CEILING ASSEMBLIES, WALLS AND BARRIERS. THE LABEL SHALL HAVE 3/8" TALL LETTERS AND BE REFLECTIVE WITH WHITE TEXT ON A RED BACKGROUND

P-143812

GRID-TIED SOLAR POWER SYSTEM

WONG RESIDENCE
1125 DECATUR ST
CHESAPEAKE, VA 23324

SAFETY LABELS

DOC ID: 143812-177800-0
DATE: 8/31/20
CREATOR: C.W.
REVIEWER: A.T.

REVISIONS

PV-4

ROOF PROPERTIES	
ROOF MATERIAL	COMPOSITION SHINGLE (1 LAYER)
SLOPE	4/12 (18.4°)
MEAN ROOF HEIGHT	22.5FT
DECK SHEATHING	15/32" (1/2" NOM.) PLYWOOD
CONSTRUCTION	RAFTERS (2X6'S), 24IN OC

MODULE MECHANICAL PROPERTIES	
MODEL	Q-CELLS Q.PEAK DUO BLK-G6 340
DIMENSIONS (AREA)	68.5IN X 40.6IN X 1.3IN (19.3 SQ FT)
WEIGHT	43.9LB

MOUNTING SYSTEM PROPERTIES	
RAIL MODEL	IRONRIDGE XR100
ANCHOR MODEL	IRONRIDGE FM-FF2-001 (FLASHED), 1.02IN AIR GAP
FASTENING METHOD	3.0 INCH EMBEDMENT INTO RAFTERS WITH (1) 5/16IN DIA. FASTENER
MAX. ALLOW. RAIL SPAN	48.0IN (ZONES 1, 2, AND 3)
MAX. MOUNT SPACING	48.0IN (ZONES 1, 2, AND 3)
MAX. ALLOW. CANTILEVER	19.2IN (ZONES 1, 2, AND 3)
GROUNDING AND BONDING	INTEGRAL GROUNDING CERTIFIED TO UL 2703 REQUIREMENTS

DEAD LOAD CALCULATIONS			
LOAD	QTY	LBS	TOTAL LBS
MODULES	6	43.9	263.4
OPTIMIZERS	6	1.4	8.4
LINEAR FEET OF RAIL	71 FT	0.7	48.0
ANCHORS	24	0.8	19.7
MISC. HARDWARE		3.9	3.9
TOTAL ARRAY WEIGHT			343.4 LBS
AREA NAME	QTY	SQFT	TOTAL SQFT
MODULES	6	19.3	115.8
POINT LOAD (343.4 LBS / 24 ATTACHMENTS)			14.3 LBS
DIST. LOAD (343.4 LBS / 115.8 SQFT)			2.97 PSF

NOTES	
1	RAFTER LOCATIONS ARE APPROXIMATE. ACTUAL LOCATIONS MAY DIFFER AND CONTRACTOR MAY NEED TO ADJUST MOUNT LOCATIONS. IN NO CASE SHALL THE MOUNT SPACING EXCEED "MAX. MOUNT SPACING"

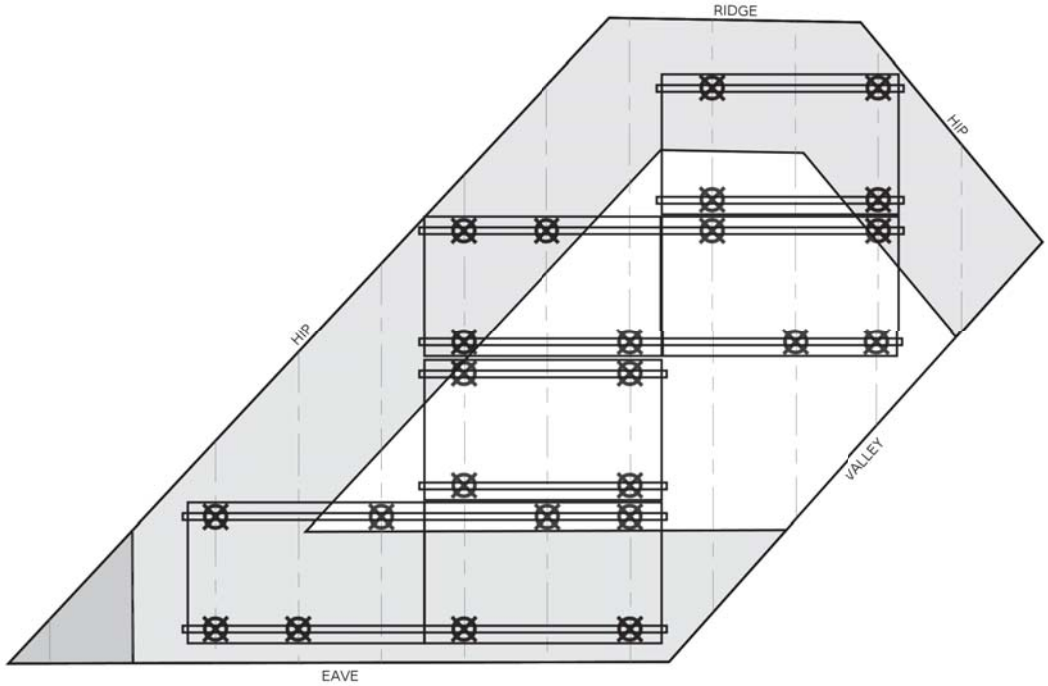

WIND ZONE I WIND ZONE II WIND ZONE III

DISTANCE α IS EQUAL TO 10% OF THE BUILDING'S LEAST HORIZONTAL DIMENSION OR 40% OF THE MEAN ROOF HEIGHT, WHICHEVER IS SMALLER, BUT NOT LESS THAN 4% OF THE LEAST HORIZONTAL DIMENSION OR 3 FEET (ACSE 7-10). THESE SETBACKS ARE APPLIED TO THE BUILDING FOOTPRINT AND PROJECTED TO THE PLANES OF ROOF CORNERS, RAKES, HIPS, EAVES, MANSARDS, AND RIDGES OF ROOF FACES.

α = MAX(MIN(0.4 * MEAN ROOF HEIGHT, 0.1 * LEAST HORIZONTAL DIMENSION), 0.04 * LEAST HORIZONTAL DIMENSION, 3 FT)

3.0 FT = MAX(MIN(0.4 * 22.5 FT, 0.1 * 27.0 FT), 0.04 * 27.0 FT, 3 FT)

P-143812

GRID-TIED SOLAR POWER SYSTEM

WONG RESIDENCE
1125 DECATUR ST
CHESAPEAKE, VA 23324

ATTACHMENT PLAN

DOC ID: 143812-177800-0
DATE: 8/31/20
CREATOR: C.W.
REVIEWER: D.K.

REVISIONS

PV-5.1

ROOF PROPERTIES	
ROOF MATERIAL	COMPOSITION SHINGLE (1 LAYER)
SLOPE	4/12 (18.4°)
MEAN ROOF HEIGHT	21.4FT
DECK SHEATHING	15/32" (1/2" NOM.) PLYWOOD
CONSTRUCTION	RAFTERS (2X6'S), 24IN OC

MODULE MECHANICAL PROPERTIES	
MODEL	Q-CELLS Q.PEAK DUO BLK-G6 340
DIMENSIONS (AREA)	68.5IN X 40.6IN X 1.3IN (19.3 SQ FT)
WEIGHT	43.9LB

MOUNTING SYSTEM PROPERTIES	
RAIL MODEL	IRONRIDGE XR100
ANCHOR MODEL	IRONRIDGE FM-FF2-001 (FLASHED), 1.02IN AIR GAP
FASTENING METHOD	3.0 INCH EMBEDMENT INTO RAFTERS WITH (1) 5/16IN DIA. FASTENER
MAX. ALLOW. RAIL SPAN	48.0IN (ZONES 1, 2, AND 3)
MAX. MOUNT SPACING	48.0IN (ZONES 1, 2, AND 3)
MAX. ALLOW. CANTILEVER	19.2IN (ZONES 1, 2, AND 3)
GROUNDING AND BONDING	INTEGRAL GROUNDING CERTIFIED TO UL 2703 REQUIREMENTS

DEAD LOAD CALCULATIONS			
LOAD	QTY	LBS	TOTAL LBS
MODULES	2	43.9	87.8
OPTIMIZERS	2	1.4	2.8
LINEAR FEET OF RAIL	24 FT	0.7	16.2
ANCHORS	8	0.8	6.6
MISC. HARDWARE		1.5	1.5
TOTAL ARRAY WEIGHT			114.9 LBS
AREA NAME	QTY	SQFT	TOTAL SQFT
MODULES	2	19.3	38.6
POINT LOAD (114.9 LBS / 8 ATTACHMENTS)			14.4 LBS
DIST. LOAD (114.9 LBS / 38.6 SQFT)			2.98 PSF

NOTES	
1	RAFTER LOCATIONS ARE APPROXIMATE. ACTUAL LOCATIONS MAY DIFFER AND CONTRACTOR MAY NEED TO ADJUST MOUNT LOCATIONS. IN NO CASE SHALL THE MOUNT SPACING EXCEED "MAX. MOUNT SPACING"

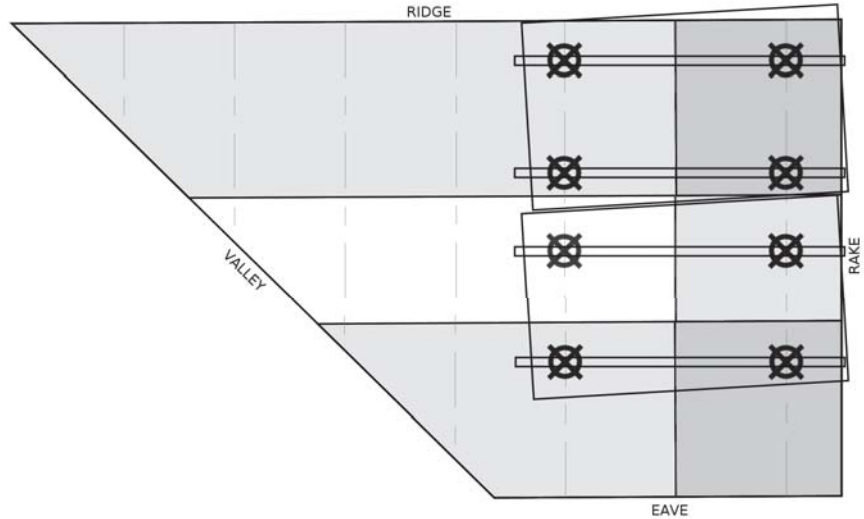

WIND ZONE I WIND ZONE II WIND ZONE III

DISTANCE α IS EQUAL TO 10% OF THE BUILDING'S LEAST HORIZONTAL DIMENSION OR 40% OF THE MEAN ROOF HEIGHT, WHICHEVER IS SMALLER, BUT NOT LESS THAN 4% OF THE LEAST HORIZONTAL DIMENSION OR 3 FEET (ACSE 7-10). THESE SETBACKS ARE APPLIED TO THE BUILDING FOOTPRINT AND PROJECTED TO THE PLANES OF ROOF CORNERS, RAKES, HIPS, EAVES, MANSARDS, AND RIDGES OF ROOF FACES.

α = MAX(MIN(0.4 * MEAN ROOF HEIGHT, 0.1 * LEAST HORIZONTAL DIMENSION), 0.04 * LEAST HORIZONTAL DIMENSION, 3 FT)

3.0 FT = MAX(MIN(0.4 * 21.4 FT, 0.1 * 27.0 FT), 0.04 * 27.0 FT, 3 FT)

1 / PV-5.2 ATTACHMENT PLAN (ORTHOGONAL PROJECTION)
SCALE: 1/2" = 1'

P-143812

GRID-TIED SOLAR POWER SYSTEM

WONG RESIDENCE
1125 DECATUR ST
CHESAPEAKE, VA 23324

ATTACHMENT PLAN

DOC ID: 143812-177800-0
DATE: 8/31/20
CREATOR: C.W.
REVIEWER: D.K.

REVISIONS

PV-5.2

ROOF PROPERTIES	
ROOF MATERIAL	COMPOSITION SHINGLE (1 LAYER)
SLOPE	4/12 (18.4°)
MEAN ROOF HEIGHT	21.8FT
DECK SHEATHING	15/32" (1/2" NOM.) PLYWOOD
CONSTRUCTION	RAFTERS (2X6'S), 24IN OC

MODULE MECHANICAL PROPERTIES	
MODEL	Q-CELLS Q.PEAK DUO BLK-G6 340
DIMENSIONS (AREA)	68.5IN X 40.6IN X 1.3IN (19.3 SQ FT)
WEIGHT	43.9LB

MOUNTING SYSTEM PROPERTIES	
RAIL MODEL	IRONRIDGE XR100
ANCHOR MODEL	IRONRIDGE FM-FF2-001 (FLASHED), 1.02IN AIR GAP
FASTENING METHOD	3.0 INCH EMBEDMENT INTO RAFTERS WITH (1) 5/16IN DIA. FASTENER
MAX. ALLOW. RAIL SPAN	48.0IN (ZONES 1, 2, AND 3)
MAX. MOUNT SPACING	48.0IN (ZONES 1, 2, AND 3)
MAX. ALLOW. CANTILEVER	19.2IN (ZONES 1, 2, AND 3)
GROUNDING AND BONDING	INTEGRAL GROUNDING CERTIFIED TO UL 2703 REQUIREMENTS

DEAD LOAD CALCULATIONS			
LOAD	QTY	LBS	TOTAL LBS
MODULES	2	43.9	87.8
OPTIMIZERS	2	1.4	2.8
LINEAR FEET OF RAIL	24 FT	0.7	16.2
ANCHORS	8	0.8	6.6
MISC. HARDWARE		1.5	1.5
TOTAL ARRAY WEIGHT			114.9 LBS
AREA NAME	QTY	SQFT	TOTAL SQFT
MODULES	2	19.3	38.6
POINT LOAD (114.9 LBS / 8 ATTACHMENTS)			14.4 LBS
DIST. LOAD (114.9 LBS / 38.6 SQFT)			2.98 PSF

NOTES	
1	RAFTER LOCATIONS ARE APPROXIMATE. ACTUAL LOCATIONS MAY DIFFER AND CONTRACTOR MAY NEED TO ADJUST MOUNT LOCATIONS. IN NO CASE SHALL THE MOUNT SPACING EXCEED "MAX. MOUNT SPACING"

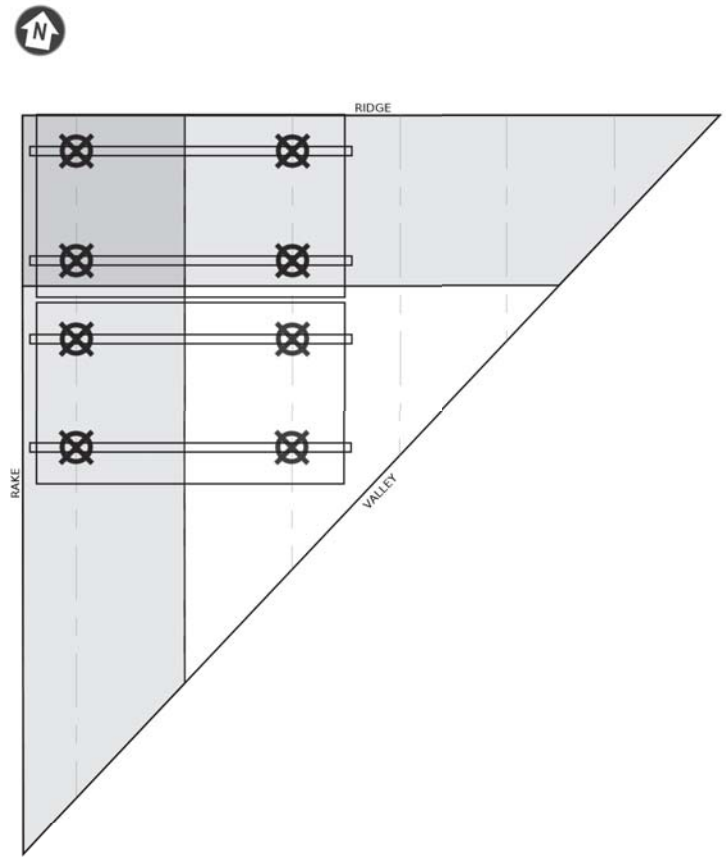

WIND ZONE I WIND ZONE II WIND ZONE III

DISTANCE α IS EQUAL TO 10% OF THE BUILDING'S LEAST HORIZONTAL DIMENSION OR 40% OF THE MEAN ROOF HEIGHT, WHICHEVER IS SMALLER, BUT NOT LESS THAN 4% OF THE LEAST HORIZONTAL DIMENSION OR 3 FEET (ACSE 7-10). THESE SETBACKS ARE APPLIED TO THE BUILDING FOOTPRINT AND PROJECTED TO THE PLANES OF ROOF CORNERS, RAKES, HIPS, EAVES, MANSARDS, AND RIDGES OF ROOF FACES.

α = MAX(MIN(0.4 * MEAN ROOF HEIGHT, 0.1 * LEAST HORIZONTAL DIMENSION), 0.04 * LEAST HORIZONTAL DIMENSION, 3 FT)

3.0 FT = MAX(MIN(0.4 * 21.8 FT, 0.1 * 27.0 FT), 0.04 * 27.0 FT, 3 FT)

1 PV-5.3 ATTACHMENT PLAN (ORTHOGONAL PROJECTION)
SCALE: 3/8" = 1'

P-143812

GRID-TIED SOLAR POWER SYSTEM

WONG RESIDENCE
1125 DECATUR ST
CHESAPEAKE, VA 23324

ATTACHMENT PLAN

DOC ID: 143812-177800-0
DATE: 8/31/20
CREATOR: C.W.
REVIEWER: D.K.

REVISIONS

PV-5.3

ROOF PROPERTIES	
ROOF MATERIAL	COMPOSITION SHINGLE (1 LAYER)
SLOPE	4/12 (18.4°)
MEAN ROOF HEIGHT	22.6FT
DECK SHEATHING	15/32" (1/2" NOM.) PLYWOOD
CONSTRUCTION	RAFTERS (2X6'S), 24IN OC

MODULE MECHANICAL PROPERTIES	
MODEL	Q-CELLS Q.PEAK DUO BLK-G6 340
DIMENSIONS (AREA)	68.5IN X 40.6IN X 1.3IN (19.3 SQ FT)
WEIGHT	43.9LB

MOUNTING SYSTEM PROPERTIES	
RAIL MODEL	IRONRIDGE XR100
ANCHOR MODEL	IRONRIDGE FM-FF2-001 (FLASHED), 1.02IN AIR GAP
FASTENING METHOD	3.0 INCH EMBEDMENT INTO RAFTERS WITH (1) 5/16IN DIA. FASTENER
MAX. ALLOW. RAIL SPAN	48.0IN (ZONES 1, 2, AND 3)
MAX. MOUNT SPACING	48.0IN (ZONES 1, 2, AND 3)
MAX. ALLOW. CANTILEVER	19.2IN (ZONES 1, 2, AND 3)
GROUNDING AND BONDING	INTEGRAL GROUNDING CERTIFIED TO UL 2703 REQUIREMENTS

DEAD LOAD CALCULATIONS			
LOAD	QTY	LBS	TOTAL LBS
MODULES	2	43.9	87.8
OPTIMIZERS	2	1.4	2.8
LINEAR FEET OF RAIL	24 FT	0.7	16.2
ANCHORS	8	0.8	6.6
MISC. HARDWARE		1.5	1.5
TOTAL ARRAY WEIGHT			114.9 LBS
AREA NAME	QTY	SQFT	TOTAL SQFT
MODULES	2	19.3	38.6
POINT LOAD (114.9 LBS / 8 ATTACHMENTS)			14.4 LBS
DIST. LOAD (114.9 LBS / 38.6 SQFT)			2.98 PSF

NOTES	
1	RAFTER LOCATIONS ARE APPROXIMATE. ACTUAL LOCATIONS MAY DIFFER AND CONTRACTOR MAY NEED TO ADJUST MOUNT LOCATIONS. IN NO CASE SHALL THE MOUNT SPACING EXCEED "MAX. MOUNT SPACING"

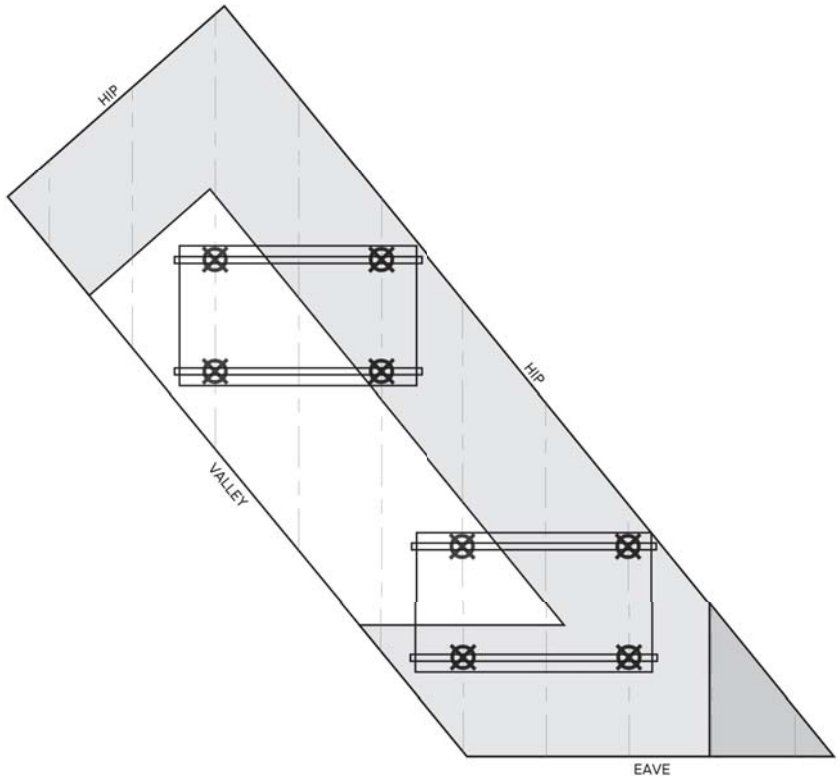

WIND ZONE I WIND ZONE II WIND ZONE III

P-143812

GRID-TIED SOLAR POWER SYSTEM

WONG RESIDENCE
1125 DECATUR ST
CHESAPEAKE, VA 23324

ATTACHMENT PLAN

DOC ID: 143812-177800-0
DATE: 8/31/20
CREATOR: C.W.
REVIEWER: D.K.

REVISIONS

PV-5.4

ROOF PROPERTIES	
ROOF MATERIAL	COMPOSITION SHINGLE (1 LAYER)
SLOPE	4/12 (18.4°)
MEAN ROOF HEIGHT	21.8FT
DECK SHEATHING	15/32" (1/2" NOM.) PLYWOOD
CONSTRUCTION	RAFTERS (2X6'S), 24IN OC

MODULE MECHANICAL PROPERTIES	
MODEL	Q-CELLS Q.PEAK DUO BLK-G6 340
DIMENSIONS (AREA)	68.5IN X 40.6IN X 1.3IN (19.3 SQ FT)
WEIGHT	43.9LB

MOUNTING SYSTEM PROPERTIES	
RAIL MODEL	IRONRIDGE XR100
ANCHOR MODEL	IRONRIDGE FM-FF2-001 (FLASHED), 1.02IN AIR GAP
FASTENING METHOD	3.0 INCH EMBEDMENT INTO RAFTERS WITH (1) 5/16IN DIA. FASTENER
MAX. ALLOW. RAIL SPAN	48.0IN (ZONES 1, 2, AND 3)
MAX. MOUNT SPACING	48.0IN (ZONES 1, 2, AND 3)
MAX. ALLOW. CANTILEVER	19.2IN (ZONES 1, 2, AND 3)
GROUNDING AND BONDING	INTEGRAL GROUNDING CERTIFIED TO UL 2703 REQUIREMENTS

DEAD LOAD CALCULATIONS			
LOAD	QTY	LBS	TOTAL LBS
MODULES	3	43.9	131.7
OPTIMIZERS	3	1.4	4.2
LINEAR FEET OF RAIL	35 FT	0.7	24.0
ANCHORS	12	0.8	9.9
MISC. HARDWARE		2.0	2.0
TOTAL ARRAY WEIGHT			171.7 LBS
AREA NAME	QTY	SQFT	TOTAL SQFT
MODULES	3	19.3	57.9
POINT LOAD (171.7 LBS / 12 ATTACHMENTS)			14.3 LBS
DIST. LOAD (171.7 LBS / 57.9 SQFT)			2.97 PSF

NOTES	
1	RAFTER LOCATIONS ARE APPROXIMATE. ACTUAL LOCATIONS MAY DIFFER AND CONTRACTOR MAY NEED TO ADJUST MOUNT LOCATIONS. IN NO CASE SHALL THE MOUNT SPACING EXCEED "MAX. MOUNT SPACING"

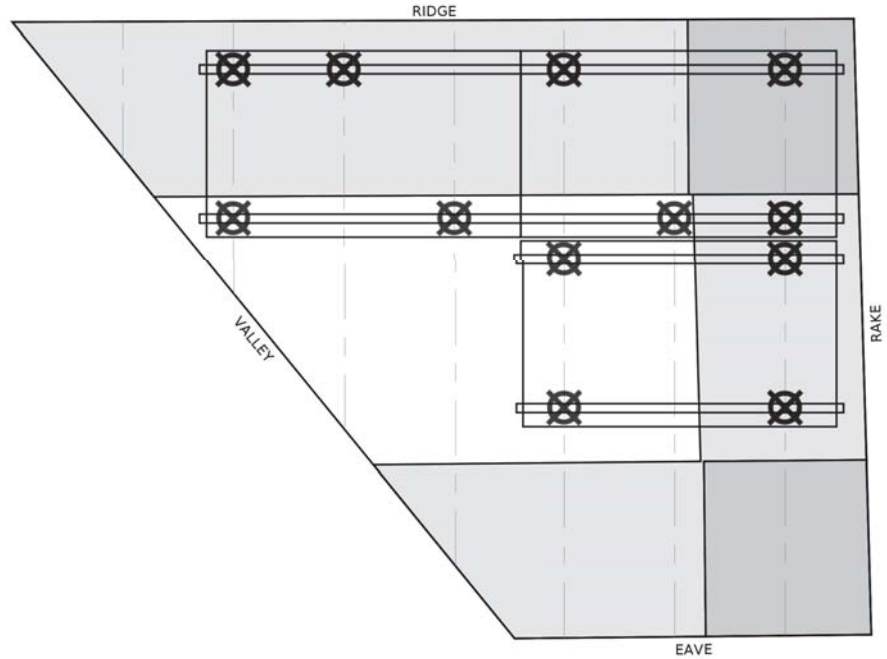

WIND ZONE I WIND ZONE II WIND ZONE III

DISTANCE α IS EQUAL TO 10% OF THE BUILDING'S LEAST HORIZONTAL DIMENSION OR 40% OF THE MEAN ROOF HEIGHT, WHICHEVER IS SMALLER, BUT NOT LESS THAN 4% OF THE LEAST HORIZONTAL DIMENSION OR 3 FEET (ACSE 7-10). THESE SETBACKS ARE APPLIED TO THE BUILDING FOOTPRINT AND PROJECTED TO THE PLANES OF ROOF CORNERS, RAKES, HIPS, EAVES, MANSARDS, AND RIDGES OF ROOF FACES.

α = MAX(MIN(0.4 * MEAN ROOF HEIGHT, 0.1 * LEAST HORIZONTAL DIMENSION), 0.04 * LEAST HORIZONTAL DIMENSION, 3 FT)

3.0 FT = MAX(MIN(0.4 * 21.8 FT, 0.1 * 27.0 FT), 0.04 * 27.0 FT, 3 FT)

1 PV-5.5 ATTACHMENT PLAN (ORTHOGONAL PROJECTION)
SCALE: 3/8" = 1'

P-143812

GRID-TIED SOLAR POWER SYSTEM

WONG RESIDENCE
1125 DECATUR ST
CHESAPEAKE, VA 23324

ATTACHMENT PLAN

DOC ID: 143812-177800-0
DATE: 8/31/20
CREATOR: C.W.
REVIEWER: D.K.

REVISIONS

PV-5.5

ROOF PROPERTIES	
ROOF MATERIAL	COMPOSITION SHINGLE (1 LAYER)
SLOPE	4/12 (18.4°)
MEAN ROOF HEIGHT	21.6FT
DECK SHEATHING	15/32" (1/2" NOM.) PLYWOOD
CONSTRUCTION	RAFTERS (2X6'S), 24IN OC

MODULE MECHANICAL PROPERTIES	
MODEL	Q-CELLS Q.PEAK DUO BLK-G6 340
DIMENSIONS (AREA)	68.5IN X 40.6IN X 1.3IN (19.3 SQ FT)
WEIGHT	43.9LB

MOUNTING SYSTEM PROPERTIES	
RAIL MODEL	IRONRIDGE XR100
ANCHOR MODEL	IRONRIDGE FM-FF2-001 (FLASHED), 1.02IN AIR GAP
FASTENING METHOD	3.0 INCH EMBEDMENT INTO RAFTERS WITH (1) 5/16IN DIA. FASTENER
MAX. ALLOW. RAIL SPAN	48.0IN (ZONES 1, 2, AND 3)
MAX. MOUNT SPACING	48.0IN (ZONES 1, 2, AND 3)
MAX. ALLOW. CANTILEVER	19.2IN (ZONES 1, 2, AND 3)
GROUNDING AND BONDING	INTEGRAL GROUNDING CERTIFIED TO UL 2703 REQUIREMENTS

DEAD LOAD CALCULATIONS			
LOAD	QTY	LBS	TOTAL LBS
MODULES	2	43.9	87.8
OPTIMIZERS	2	1.4	2.8
LINEAR FEET OF RAIL	24 FT	0.7	16.2
ANCHORS	8	0.8	6.6
MISC. HARDWARE		1.5	1.5
TOTAL ARRAY WEIGHT			114.9 LBS
AREA NAME	QTY	SQFT	TOTAL SQFT
MODULES	2	19.3	38.6
POINT LOAD (114.9 LBS / 8 ATTACHMENTS)			14.4 LBS
DIST. LOAD (114.9 LBS / 38.6 SQFT)			2.98 PSF

NOTES	
1	RAFTER LOCATIONS ARE APPROXIMATE. ACTUAL LOCATIONS MAY DIFFER AND CONTRACTOR MAY NEED TO ADJUST MOUNT LOCATIONS. IN NO CASE SHALL THE MOUNT SPACING EXCEED "MAX. MOUNT SPACING"

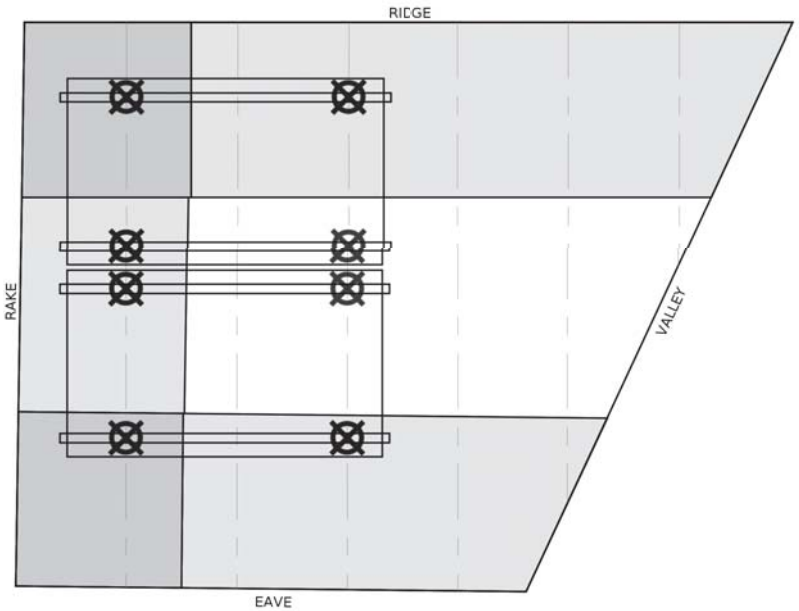

WIND ZONE I WIND ZONE II WIND ZONE III

DISTANCE α IS EQUAL TO 10% OF THE BUILDING'S LEAST HORIZONTAL DIMENSION OR 40% OF THE MEAN ROOF HEIGHT, WHICHEVER IS SMALLER, BUT NOT LESS THAN 4% OF THE LEAST HORIZONTAL DIMENSION OR 3 FEET (ACSE 7-10). THESE SETBACKS ARE APPLIED TO THE BUILDING FOOTPRINT AND PROJECTED TO THE PLANES OF ROOF CORNERS, RAKES, HIPS, EAVES, MANSARDS, AND RIDGES OF ROOF FACES.

α = MAX(MIN(0.4 * MEAN ROOF HEIGHT, 0.1 * LEAST HORIZONTAL DIMENSION), 0.04 * LEAST HORIZONTAL DIMENSION, 3 FT)

3.0 FT = MAX(MIN(0.4 * 21.6 FT, 0.1 * 27.0 FT), 0.04 * 27.0 FT, 3 FT)

1 PV-5.6 ATTACHMENT PLAN (ORTHOGONAL PROJECTION)
SCALE: 3/8" = 1'

P-143812

GRID-TIED SOLAR POWER SYSTEM

WONG RESIDENCE
1125 DECATUR ST
CHESAPEAKE, VA 23324

ATTACHMENT PLAN

DOC ID: 143812-177800-0
DATE: 8/31/20
CREATOR: C.W.
REVIEWER: D.K.

REVISIONS

PV-5.6

MOUNTING SYSTEM NOTES	
1	FLASHING SHALL BE APPLIED IN ACCORDANCE WITH MANUFACTURERS' INSTRUCTIONS.
2	IF THERE IS ANY CONFLICT BETWEEN WHAT IS DEPICTED HERE AND INSTRUCTIONS PROVIDED BY A MANUFACTURER, THE MANUFACTURER'S INSTRUCTIONS SHALL SUPERCEDE.

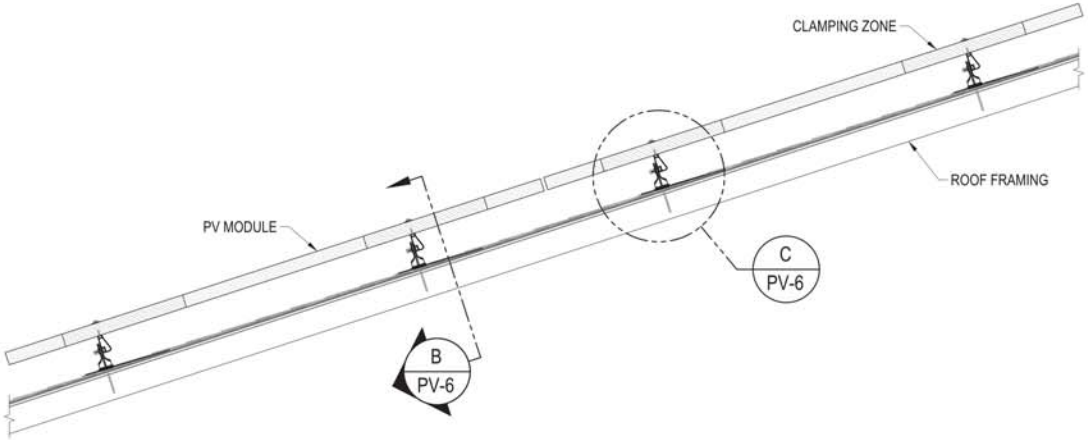

A PV-6 RACKING ELEVATION (TRANSVERSE VIEW)
SCALE: NTS

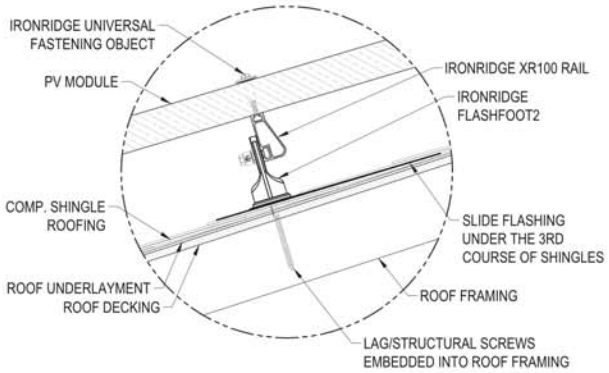

C PV-6 ATTACHMENT DETAIL (TRANSVERSE VIEW)
SCALE: NTS

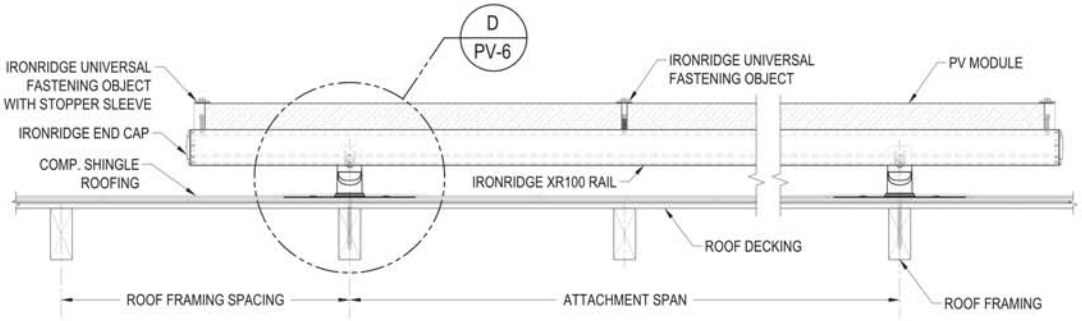

B PV-6 RACKING ELEVATION (LONGITUDINAL VIEW)
SCALE: NTS

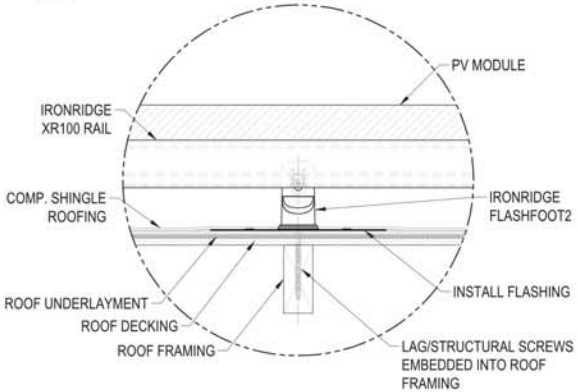

D PV-6 ATTACHMENT DETAIL (LONGITUDINAL VIEW)
SCALE: NTS

P-143812

GRID-TIED SOLAR POWER SYSTEM

WONG RESIDENCE
1125 DECATUR ST
CHESAPEAKE, VA 23324

ATTACHMENT DETAILS

DOC ID: 143812-177800-0
DATE: 8/31/20
CREATOR: C.W.
REVIEWER: D.K.

REVISIONS

PV-6

1 PV-7 FIRE SAFETY PLAN
SCALE: 1" = 10'

GENERAL NOTES	
1	ROOF ACCESS POINTS SHALL BE LOCATED IN AREAS THAT DO NOT REQUIRE THE PLACEMENT OF GROUND LADDERS OVER OPENINGS SUCH AS WINDOWS OR DOORS, AND LOCATED AT STRONG POINTS OF BUILDING CONSTRUCTION IN LOCATIONS WHERE THE ACCESS POINT DOES NOT CONFLICT WITH OVERHEAD OBSTRUCTIONS SUCH AS TREE LIMBS, WIRES OR SIGNS. (IFC 605.11.1.1)
2	PANELS AND MODULES INSTALLED ON GROUP R-3 BUILDINGS WITH ROOF HIPS AND VALLEYS SHALL NOT BE LOCATED CLOSER THAN 18 INCHES TO A HIP OR A VALLEY WHERE PANELS/MODULES ARE TO BE PLACED ON BOTH SIDES OF A HIP OR VALLEY. WHERE PANELS ARE TO BE LOCATED ON ONLY ONE SIDE OF A HIP OR VALLEY THAT IS OF EQUAL LENGTH, THE PANELS SHALL BE PERMITTED TO BE PLACED DIRECTLY ADJACENT TO THE HIP OR VALLEY. (IFC 605.11.1.2.4)
3	PANELS AND MODULES INSTALLED ON GROUP R-3 BUILDINGS SHALL BE LOCATED NOT LESS THAN 3 FEET (914 MM) FROM THE RIDGE IN ORDER TO ALLOW FOR FIRE DEPARTMENT SMOKE VENTILATION OPERATIONS, EXCEPT IN SUCH CASES WHERE AN ALTERNATIVE VENTILATION METHOD APPROVED BY THE FIRE CHIEF HAS BEEN PROVIDED OR WHERE THE FIRE CHIEF HAS DETERMINED VERTICAL VENTILATION TECHNIQUES WILL NOT BE EMPLOYED. (IFC 605.11.1.2.5)

1 PV MODULES INSTALLED ON ROOF WITH IRONRIDGE ROOF MOUNTING SYSTEM. THE MOUNTING SYSTEM IS UL 1703 CLASS A FIRE RATED ON A 4/12 SLOPED ROOF WHEN INSTALLED WITH TYPE 1 OR 2 MODULES. THE Q-CELLS Q.PEAK DUO BLK-G6 340 IS TYPE 2.

2 ROOF ACCESS POINT

3 ALL ARRAY CIRCUITS SHALL BE ROUTED THROUGH THE INTERIOR OF THE BUILDING, AND WHERE POSSIBLE, ALONG THE BOTTOM OF LOAD BEARING MEMBERS. NO CONDUIT SHALL BE INSTALLED ABOVE THE ROOF.

P-143812

GRID-TIED SOLAR POWER SYSTEM

WONG RESIDENCE
1125 DECATUR ST
CHESAPEAKE, VA 23324

FIRE SAFETY PLAN

DOC ID: 143812-177800-0
DATE: 8/31/20
CREATOR: C.W.
REVIEWER: D.K.

REVISIONS

PV-7

powered by Q.ANTUM DUO

Q.PEAK DUO BLK-G6

330-345

ENDURING HIGH PERFORMANCE

PV magazine AWARD 2017 Top Innovation

VDE Quality Tested
- High reliability
- low degradation
- optimized durability
- continuous life monitoring

www.VDEinfo.com
ID. 40032587

EUPD RESEARCH TOP BRAND PV MODULES EUROPE 2019

Q CELLS
YIELD SECURITY
- ANTI PID TECHNOLOGY (APT)
- HOT -SPOT PRO TECT (HSP)
- TRACE ABLE QUALITY (TRA.Q™)
- ANTI LID TECHNOLOGY (ALT)

Q.ANTUM TECHNOLOGY: LOW LEVELIZED COST OF ELECTRICITY
Higher yield per surface area, lower BOS costs, higher power classes, and an efficiency rate of up to 19.5%.

INNOVATIVE ALL-WEATHER TECHNOLOGY
Optimal yields, whatever the weather with excellent low-light and temperature behavior.

ENDURING HIGH PERFORMANCE
Long-term yield security with Anti LID and Anti PID Technology[1], Hot-Spot Protect and Traceable Quality Tra.Q™.

EXTREME WEATHER RATING
High-tech aluminum alloy frame, certified for high snow (5400 Pa) and wind loads (4000 Pa) regarding IEC.

A RELIABLE INVESTMENT
Inclusive 12-year product warranty and 25-year linear performance guarantee[2].

STATE OF THE ART MODULE TECHNOLOGY
Q.ANTUM DUO combines cutting edge cell separation and innovative wiring with Q.ANTUM Technology.

[1] APT test conditions according to IEC/TS 62804-1:2015, method B (−1500 V, 168 h)
[2] See data sheet on rear for further information

THE IDEAL SOLUTION FOR:

Rooftop arrays on residential buildings

Engineered in Germany

Q CELLS

MECHANICAL SPECIFICATION

Format	68.5 × 40.6 × 1.26 in (including frame) (1740 × 1030 × 32 mm)
Weight	43.9 lbs (19.9 kg)
Front Cover	0.13 in (3.2 mm) thermally pre-stressed glass with anti-reflection technology
Back Cover	Composite film
Frame	Black anodized aluminum
Cell	6 × 20 monocrystalline Q.ANTUM solar half cells
Junction Box	2.09–3.98 × 1.26–2.36 × 0.59–0.71 in (53–101 × 32–60 × 15–18 mm), Protection class IP67, with bypass diodes
Cable	4 mm² Solar cable; (+) ≥45.3 in (1150 mm), (−) ≥45.3 in (1150 mm)
Connector	Stäubli MC4, Amphenol UTX, Renhe 05-6, Tongling TL-Cable01S, JMTHY JM601; IP68 or Friends PV2e; IP67

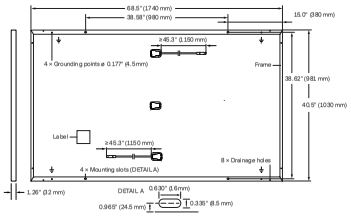

ELECTRICAL CHARACTERISTICS

POWER CLASS				330	335	340	345
MINIMUM PERFORMANCE AT STANDARD TEST CONDITIONS, STC[1] (POWER TOLERANCE +5 W / −0 W)							
Minimum	Power at MPP[1]	P_{MPP}	[W]	330	335	340	345
	Short Circuit Current[1]	I_{SC}	[A]	10.41	10.47	10.52	10.58
	Open Circuit Voltage[1]	V_{OC}	[V]	40.15	40.41	40.66	40.92
	Current at MPP	I_{MPP}	[A]	9.91	9.97	10.02	10.07
	Voltage at MPP	V_{MPP}	[V]	33.29	33.62	33.94	34.25
	Efficiency[1]	η	[%]	≥18.4	≥18.7	≥19.0	≥19.3
MINIMUM PERFORMANCE AT NORMAL OPERATING CONDITIONS, NMOT[2]							
Minimum	Power at MPP	P_{MPP}	[W]	247.0	250.7	254.5	258.2
	Short Circuit Current	I_{SC}	[A]	8.39	8.43	8.48	8.52
	Open Circuit Voltage	V_{OC}	[V]	37.86	38.10	38.34	38.59
	Current at MPP	I_{MPP}	[A]	7.80	7.84	7.89	7.93
	Voltage at MPP	V_{MPP}	[V]	31.66	31.97	32.27	32.57

[1] Measurement tolerances P_{MPP} ±3%; I_{SC}; V_{OC} ±5% at STC: 1000 W/m², 25 ± 2 °C, AM 1.5 G according to IEC 60904-3 • [2] 800 W/m², NMOT, spectrum AM 1.5 G

Q CELLS PERFORMANCE WARRANTY

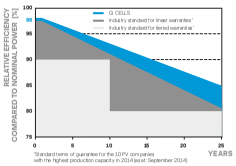

At least 98% of nominal power during first year. Thereafter max. 0.54% degradation per year. At least 93.1% of nominal power up to 10 years. At least 85% of nominal power up to 25 years.

All data within measurement tolerances. Full warranties in accordance with the warranty terms of the Q CELLS sales organization of your respective country.

PERFORMANCE AT LOW IRRADIANCE

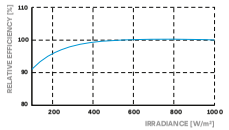

Typical module performance under low irradiance conditions in comparison to STC conditions (25 °C, 1000 W/m²)

TEMPERATURE COEFFICIENTS

Temperature Coefficient of I_{SC}	α	[%/K]	+0.04	Temperature Coefficient of V_{OC}	β	[%/K]	−0.27
Temperature Coefficient of P_{MPP}	γ	[%/K]	−0.36	Normal Module Operating Temperature	NMOT	[°F]	109 ± 5.4 (43 ± 3 °C)

PROPERTIES FOR SYSTEM DESIGN

Maximum System Voltage V_{SYS}	[V]	1000	Safety Class	II
Maximum Series Fuse Rating	[A DC]	20	Fire Rating	C (IEC) / TYPE 2 (UL)
Max. Design Load, Push / Pull[3]	[lbs/ft²]	75 (3600 Pa) / 55 (2667 Pa)	Permitted Module Temperature on Continuous Duty	−40 °F up to +185 °F (−40 °C up to +85 °C)
Max. Test Load, Push / Pull[3]	[lbs/ft²]	113 (5400 Pa) / 84 (4000 Pa)		

[3] See Installation Manual

QUALIFICATIONS AND CERTIFICATES

UL 1703, VDE Quality Tested, CE-compliant, IEC 61215:2016, IEC 61730:2016, Application Class II, U.S. Patent No. 9,893,215 (solar cells)

PACKAGING INFORMATION

Number of Modules per Pallet	32
Number of Pallets per 53' Trailer	28
Number of Pallets per 40' HC-Container	24
Pallet Dimensions (L × W × H)	71.5 × 45.3 × 46.9 in (1815 × 1150 × 1190 mm)
Pallet Weight	1505 lbs (683 kg)

Note: Installation instructions must be followed. See the installation and operating manual or contact our technical service department for further information on approved installation and use of this product.

Hanwha Q CELLS America Inc.
400 Spectrum Center Drive, Suite 1400, Irvine, CA 92618, USA | **TEL** +1 949 748-5996 | **EMAIL** inquiry@us.q-cells.com | **WEB** www.q-cells.com/na

Specifications subject to technical changes © Q CELLS Q.PEAK DUO BLK-G6_330-345_2019-03_Rev01_NA

Power Optimizer

For North America

P320 / P340 / P370 / P400 / P405 / P505

POWER OPTIMIZER

PV power optimization at the module-level

- Specifically designed to work with SolarEdge inverters
- Up to 25% more energy
- Superior efficiency (99.5%)
- Mitigates all types of module mismatch losses, from manufacturing tolerance to partial shading
- Flexible system design for maximum space utilization
- Fast installation with a single bolt
- Next generation maintenance with module-level monitoring
- Meets NEC requirements for arc fault protection (AFCI) and Photovoltaic Rapid Shutdown System (PVRSS)
- Module-level voltage shutdown for installer and firefighter safety

solaredge.com

solaredge

Power Optimizer

For North America

P320 / P340 / P370 / P400 / P405 / P505

Optimizer model (typical module compatibility)	P320 (for 60-cell modules)	P340 (for high-power 60-cell modules)	P370 (for higher-power 60 and 72-cell modules)	P400 (for 72 & 96-cell modules)	P405 (for thin film modules)	P505 (for higher current modules)	
INPUT							
Rated Input DC Power[1]	320	340	370	400	405	505	W
Absolute Maximum Input Voltage (Voc at lowest temperature)	48		60	80	125[2]	83[2]	Vdc
MPPT Operating Range	8 - 48		8 - 60	8 - 80	12.5 - 105	12.5 - 83	Vdc
Maximum Short Circuit Current (Isc)	11			10.1		14	Adc
Maximum DC Input Current	13.75			12.63		17.5	Adc
Maximum Efficiency	99.5						%
Weighted Efficiency	98.8					98.6	%
Overvoltage Category	II						
OUTPUT DURING OPERATION (POWER OPTIMIZER CONNECTED TO OPERATING SOLAREDGE INVERTER)							
Maximum Output Current	15						Adc
Maximum Output Voltage	60				85		Vdc
OUTPUT DURING STANDBY (POWER OPTIMIZER DISCONNECTED FROM SOLAREDGE INVERTER OR SOLAREDGE INVERTER OFF)							
Safety Output Voltage per Power Optimizer	1 ± 0.1						Vdc
STANDARD COMPLIANCE							
EMC	FCC Part15 Class B, IEC61000-6-2, IEC61000-6-3						
Safety	IEC62109-1 (class II safety), UL1741						
RoHS	Yes						
INSTALLATION SPECIFICATIONS							
Maximum Allowed System Voltage	1000						Vdc
Compatible inverters	All SolarEdge Single Phase and Three Phase inverters						
Dimensions (W x L x H)	128 x 152 x 28 / 5 x 5.97 x 1.1			128 x 152 x 36 / 5 x 5.97 x 1.42	128 x 152 x 50 / 5 x 5.97 x 1.96	128 x 152 x 59 / 5 x 5.97 x 2.32	mm / in
Weight (including cables)	630 / 1.4			750 / 1.7	845 / 1.9	1064 / 2.3	gr / lb
Input Connector	MC4[3]						
Output Wire Type / Connector	Double Insulated; MC4						
Output Wire Length	0.95 / 3.0		1.2 / 3.9				m / ft
Input Wire Length	0.16 / 0.52						m / ft
Operating Temperature Range	-40 - +85 / -40 - +185						°C / °F
Protection Rating	IP68 / NEMA6P						
Relative Humidity	0 - 100						%

(1) Rated STC power of the module. Module of up to +5% power tolerance allowed
(2) NEC 2017 requires max input voltage be not more than 80V
(3) For other connector types please contact SolarEdge

PV System Design Using a SolarEdge Inverter[4][5]		Single Phase HD-Wave	Single phase	Three Phase 208V	Three Phase 480V	
Minimum String Length (Power Optimizers)	P320, P340, P370, P400	8		10	18	
	P405 / P505	6		8	14	
Maximum String Length (Power Optimizers)		25		25	50[6]	
Maximum Power per String		5700 (6000 with SE7600-US - SE11400-US)	5250	6000[7]	12750[8]	W
Parallel Strings of Different Lengths or Orientations		Yes				

(4) For detailed string sizing information refer to: http://www.solaredge.com/sites/default/files/string_sizing_na.pdf
(5) It is not allowed to mix P405/P505 with P320/P340/P370/P400 in one string
(6) A string with more than 30 optimizers does not meet NEC rapid shutdown requirements; safety voltage will be above the 30V requirement
(7) For SE14.4KUS/SE43.2KUS: It is allowed to install up to 6,500W per string when 3 strings are connected to the inverter (3 strings per unit for SE43.2KUS) and when the maximum power difference between the strings is up to 1,000W
(8) For SE30KUS/SE33.3KUS/SE66.6KUS/SE100KUS: It is allowed to install up to 15,000W per string when 3 strings are connected to the inverter (3 strings per unit for SE66.6KUS/SE100KUS) and when the maximum power difference between the strings is up to 2,000W

© SolarEdge Technologies Ltd. All rights reserved. SOLAREDGE, the SolarEdge logo, OPTIMIZED BY SOLAREDGE are trademarks or registered trademarks of SolarEdge Technologies, Inc. All other trademarks mentioned herein are trademarks of their respective owners. Date: 12/2018/V01/ENG NAM. Subject to change without notice.

CE RoHS

SolaDeck

FLASHED PV ROOF-MOUNT COMBINER/ENCLOSURE

Basic Features

- Stamped Seamless Construction
- 18 Gauge Galvanized Steel
- Powder Coated Surfaces
- Flashes into the roof deck
- 3 Roof deck knockouts .5", .75", 1"
- 5 Centering dimples for entry/exit fittings or conduit
- 2 Position Ground lug installed
- Mounting Hardware Included

SolaDeck Model SD 0783

SolaDeck UL50 Type 3R Enclosures

Available Models:
Model SD 0783 - (3" fixed Din Rail)
Model SD 0786 - (6" slotted Din Rail)

SolaDeck UL 1741 Combiner/Enclosures

Models SD 0783-41 and SD 0786-41 are labeled and ETL listed UL STD 1741 according to the UL STD 1741 for photovoltaic combiner enclosures.

Max Rated - 600VDC, 120AMPS

Model SD 0783-41 3" Fixed Din Rail fastened using Norlock System

****Typical System Configuration**

4- Din Rail Mounted Fuse Holders 600VDC 30 AMP
1- Power Distribution Block 600VDC 175AMP
1- Bus Bar with UL lug

Model SD 0786-41 6" Slotted Din Rail fastened using steel studs

****Typical System Configuration**

4- Din Rail Mounted Fuse Holders 600VDC 30 AMP
4- Din Rail Mounted Terminal Blocks
Bus Bars with UL lug

**Fuse holders and terminal blocks added in the field must be UL listed or recognized and meet 600 VDC 30 AMP 110C for fuse holders, 600V 50 AMP 90C for rail mounted terminal blocks and 600 V 175 AMP 90C for Power Distribution Blocks. Use Copper Wire Conductors.

Cover is trimmed to allow conduit or fittings, base is center dimpled for fitting locations.

Model SD 0783-41, wired with Din Rail mounted fuse holders, bus bar and power distribution block.

Model SD 0786-41, wired with Din Rail mounted fuse holders, terminal blocks and bus bars.

RSTC Enterprises, Inc • 2219 Heimstead Road • Eau Cliare, WI 54703
For product information call 1(866) 367-7782

Single Phase Inverter with HD-Wave Technology

for North America

SE3000H-US / SE3800H-US / SE5000H-US / SE6000H-US / SE7600H-US / SE10000H-US / SE11400H-US

INVERTERS

12-25 YEAR WARRANTY

Optimized installation with HD-Wave technology

- Specifically designed to work with power optimizers
- Record-breaking 99% weighted efficiency
- Quick and easy inverter commissioning directly from a smartphone using the SolarEdge SetApp
- Fixed voltage inverter for longer strings
- Integrated arc fault protection and rapid shutdown for NEC 2014 and 2017, per article 690.11 and 690.12
- UL1741 SA certified, for CPUC Rule 21 grid compliance
- Small, lightweight, and easy to install both outdoors or indoors
- Built-in module-level monitoring
- Optional: Faster installations with built-in consumption metering (1% accuracy) and production revenue grade metering (0.5% accuracy, ANSI C12.20)

solaredge.com

solaredge

Single Phase Inverter with HD-Wave Technology for North America

SE3000H-US / SE3800H-US / SE5000H-US / SE6000H-US/ SE7600H-US / SE10000H-US / SE11400H-US

MODEL NUMBER	SE3000H-US	SE3800H-US	SE5000H-US	SE6000H-US	SE7600H-US	SE10000H-US	SE11400H-US	
APPLICABLE TO INVERTERS WITH PART NUMBER	SEXXXXH-XXXXXBXX4							
OUTPUT								
Rated AC Power Output	3000	3800 @ 240V 3300 @ 208V	5000	6000 @ 240V 5000 @ 208V	7600	10000	11400 @ 240V 10000 @ 208V	VA
Maximum AC Power Output	3000	3800 @ 240V 3300 @ 208V	5000	6000 @ 240V 5000 @ 208V	7600	10000	11400 @ 240V 10000 @ 208V	VA
AC Output Voltage Min.-Nom.-Max. (211 - 240 - 264)	✓	✓	✓	✓	✓	✓	✓	Vac
AC Output Voltage Min.-Nom.-Max. (183 - 208 - 229)	-	✓	-	✓	-	-	✓	Vac
AC Frequency (Nominal)	59.3 - 60 - 60.5[1]							Hz
Maximum Continuous Output Current @240V	12.5	16	21	25	32	42	47.5	A
Maximum Continuous Output Current @208V	-	16	-	24	-	-	48.5	A
Power Factor	1, Adjustable - 0.85 to 0.85							
GFDI Threshold	1							A
Utility Monitoring, Islanding Protection, Country Configurable Thresholds	Yes							
INPUT								
Maximum DC Power @240V	4650	5900	7750	9300	11800	15500	17650	W
Maximum DC Power @208V	-	5100	-	7750	-	-	15500	W
Transformer-less, Ungrounded	Yes							
Maximum Input Voltage	480							Vdc
Nominal DC Input Voltage	380				400			Vdc
Maximum Input Current @240V[2]	8.5	10.5	13.5	16.5	20	27	30.5	Adc
Maximum Input Current @208V[2]	-	9	-	13.5	-	-	27	Adc
Max. Input Short Circuit Current	45							Adc
Reverse-Polarity Protection	Yes							
Ground-Fault Isolation Detection	600kΩ Sensitivity							
Maximum Inverter Efficiency	99	99.2						%
CEC Weighted Efficiency	99						99 @ 240V 98.5 @ 208V	%
Nighttime Power Consumption	< 2.5							W

[1] For other regional settings please contact SolarEdge support
[2] A higher current source may be used; the inverter will limit its input current to the values stated

/ Single Phase Inverter with HD-Wave Technology for North America

SE3000H-US / SE3800H-US / SE5000H-US / SE6000H-US/ SE7600H-US / SE10000H-US / SE11400H-US

MODEL NUMBER	SE3000H-US	SE3800H-US	SE5000H-US	SE6000H-US	SE7600H-US	SE10000H-US	SE11400H-US	
ADDITIONAL FEATURES								
Supported Communication Interfaces	RS485, Ethernet, ZigBee (optional), Cellular (optional)							
Revenue Grade Metering, ANSI C12.20	Optional[(1)]							
Consumption metering								
Inverter Commissioning	With the SetApp mobile application using Built-in Wi-Fi Access Point for Local Connection							
Rapid Shutdown - NEC 2014 and 2017 690.12	Automatic Rapid Shutdown upon AC Grid Disconnect							
STANDARD COMPLIANCE								
Safety	UL1741, UL1741 SA, UL1699B, CSA C22.2, Canadian AFCI according to T.I.L. M-07							
Grid Connection Standards	IEEE1547, Rule 21, Rule 14 (HI)							
Emissions	FCC Part 15 Class B							
INSTALLATION SPECIFICATIONS								
AC Output Conduit Size / AWG Range	1'' Maximum / 14-6 AWG					1'' Maximum /14-4 AWG		
DC Input Conduit Size / # of Strings / AWG Range	1'' Maximum / 1-2 strings / 14-6 AWG					1'' Maximum / 1-3 strings / 14-6 AWG		
Dimensions with Safety Switch (HxWxD)	17.7 x 14.6 x 6.8 / 450 x 370 x 174					21.3 x 14.6 x 7.3 / 540 x 370 x 185		in / mm
Weight with Safety Switch	22 / 10		25.1 / 11.4	26.2 / 11.9		38.8 / 17.6		lb / kg
Noise	< 25				<50			dBA
Cooling	Natural Convection							
Operating Temperature Range	-40 to +140 / -40 to +60[(4)]							°F / °C
Protection Rating	NEMA 4X (Inverter with Safety Switch)							

(1) Inverter with Revenue Grade Meter P/N: SExxxxH-US000BNC4; Inverter with Revenue Grade Production and Consumption Meter P/N: SExxxxH-US000BNI4 . For consumption metering, current transformers should be ordered separately: SEACT0750-200NA-20 or SEACT0750-400NA-20. 20 units per box

(4) Full power up to at least 50°C / 122°F; for power de-rating information refer to: https://www.solaredge.com/sites/default/files/se-temperature-derating-note-na.pdf

How to Enable Consumption Monitoring

By simply wiring current transformers through the inverter's existing AC conduits and connecting them to the service panel, homeowners will gain full insight into their household energy usage helping them to avoid high electricity bills

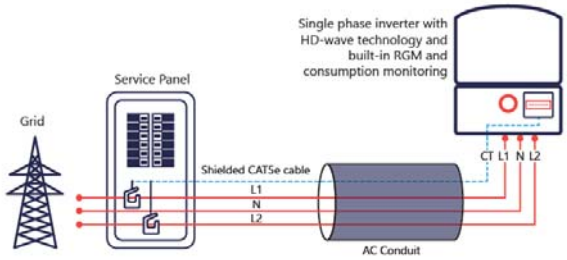

© SolarEdge Technologies, Inc. All rights reserved. SOLAREDGE, the SolarEdge logo, OPTIMIZED BY SOLAREDGE are trademarks or registered trademarks of SolarEdge Technologies, Inc. All other trademarks mentioned herein are trademarks of their respective owners. Date: 01/2020/V01/ENG NAM. Subject to change without notice.

RoHS

Datasheet

IRONRIDGE

Flush Mount System

Built for solar's toughest roofs.

IronRidge builds the strongest mounting system for pitched roofs in solar. Every component has been tested to the limit and proven in extreme environments.

Our rigorous approach has led to unique structural features, such as curved rails and reinforced flashings, and is also why our products are fully certified, code compliant and backed by a 25-year warranty.

Strength Tested
All components evaluated for superior structural performance.

PE Certified
Pre-stamped engineering letters available in most states.

Class A Fire Rating
Certified to maintain the fire resistance rating of the existing roof.

Design Assistant
Online software makes it simple to create, share, and price projects.

UL 2703 Listed System
Entire system and components meet newest effective UL 2703 standard.

25-Year Warranty
Products guaranteed to be free of impairing defects.

Datasheet

XR Rails

XR10 Rail

A low-profile mounting rail for regions with light snow.

- 6' spanning capability
- Moderate load capability
- Clear and black finish

XR100 Rail

The ultimate residential solar mounting rail.

- 8' spanning capability
- Heavy load capability
- Clear and black finish

XR1000 Rail

A heavyweight mounting rail for commercial projects.

- 12' spanning capability
- Extreme load capability
- Clear anodized finish

Bonded Splices

All rails use internal splices for seamless connections.

- Self-drilling screws
- Varying versions for rails
- Forms secure bonding

Clamps & Grounding

UFOs

Universal Fastening Objects bond modules to rails.

- Fully assembled & lubed
- Single, universal size
- Clear and black finish

Stopper Sleeves

Snap onto the UFO to turn into a bonded end clamp.

- Bonds modules to rails
- Sized to match modules
- Clear and black finish

CAMO

Bond modules to rails while staying completely hidden.

- Universal end-cam clamp
- Tool-less installation
- Fully assembled

Grounding Lugs

Connect arrays to equipment ground.

- Low profile
- Single tool installation
- Mounts in any direction

Attachments

FlashFoot2

Flash and mount XR Rails with superior waterproofing.

- Twist-on Cap eases install
- Wind-driven rain tested
- Mill and black finish

Conduit Mount

Flash and mount conduit, strut, or junction boxes.

- Twist-on Cap eases install
- Wind-driven rain tested
- Secures ¾" or 1" conduit

Slotted L-Feet

Drop-in design for rapid rail attachment.

- Secure rail connections
- Slot for vertical adjusting
- Clear and black finish

Bonding Hardware

Bond and attach XR Rails to roof attachments.

- T & Square Bolt options
- Nut uses 7/16" socket
- Assembled and lubricated

Resources

Design Assistant
Go from rough layout to fully engineered system. For free.
Go to IronRidge.com/design

NABCEP Certified Training
Earn free continuing education credits, while learning more about our systems.
Go to IronRidge.com/training

© 2019 IronRidge, Inc. All rights reserved. U.S. Patents: #8,695,290; #9,819,303; #9,865,938; Others Pending. Version 1.70

1495 Zephyr Avenue
Hayward, CA 94544
1-800-227-9523
IronRidge.com

Attn: Corey Geiger, COO, IronRidge Inc.
Date: June 24, 2019

Re: Structural Certification and Span Tables for IronRidge Flush Mount System

This letter addresses the structural performance and code compliance of IronRidge's Flush Mount System. The Flush Mount System is a proprietary rooftop mounting system used to support photovoltaic (PV) modules installed in portrait or landscape orientation and set parallel to the underlying roof surface. PV modules are supported by extruded aluminum XR Rails and secured to the rails with IronRidge mounting clamps. The XR Rails are side mounted to a selected roof attachment with 3/8" stainless steel bonding hardware and then attached directly to the roof structure or to a stanchion that is fastened to the underlying roof structure. Assembly details of a typical Flush Mount installation and its core components are shown in Exhibit EX-0015.

The IronRidge Flush Mount System is designed and certified to the structural requirements of the reference standards listed below, for the load conditions and configurations tabulated in the attached span tables.

- ASCE/SEI 7-10 Minimum Design Loads for Buildings and Other Structures (ASCE 7-10)
- 2015 International Building Code (IBC-2015)
- 2015 Virginia Uniform Statewide Building Code (USBC)
- 2015 Aluminum Design Manual (ADM-2015)

The tables included in this letter provide the maximum allowable spans of XR Rails in the Flush Mount System for the respective loads and configurations listed, covering wind exposure categories B, C, & D, roof zones 1, 2 & 3, and roof slopes from 0º to 45º. The span tables are applicable provided that the following conditions are met:

1. *Span* is the distance between two adjacent roof attachment points (measured at the center of the attachment fastener)

2. The underlying roof pitch, measured between roof surface and horizontal plane, is 45º or less.

3. The *mean roof height*, defined as the average of the roof eave height and the roof ridge height measured from grade, does not exceed 30 feet.

4. Module length shall not exceed the listed maximum dimension provided for the respective span table and module width shall not exceed 42".

5. All Flush Mount components shall be installed in a professional workmanlike manner per IronRidge's *Flush Mount installation manual* and other applicable standards for general roof construction practice.

© 2019 IronRidge, Inc.

1495 Zephyr Avenue
Hayward, CA 94544
1-800-227-9523
IronRidge.com

The span tables provided in this letter are certified based on the structural performance of IronRidge XR Rails only with no consideration of the structural adequacy of the chosen roof attachments, PV modules, or the underlying roof supporting members. It is the responsibility of the installer or system designer to verify the structural capacity and adequacy of the aforementioned system components in regards to the applied or resultant loads of any chosen array configuration.

Sincerely,

Gang Xuan, PE, LEED AP
Senior Structural Engineer

© 2019 IronRidge, Inc.

FRAMELESS MODULE KITS

Insert Frameless Kit T-bolt in top rail slot. Place star washer over T-bolt, allowing it to rest on top of rail. Secure module clamps with a hex nut and torque to **80 in-lbs**.

- **Tested or evaluated module clamps:**
  - **Sunforson silver or black SFS-UTMC-200(B) mid and SFS-UTEC-200(B) end clamps.**
  - **Sunpreme silver or black mid and end clamps with part numbers 7500105X where "X" is 1, 5, 6 or 7.**
  - **IronRidge silver or black mid and end clamps with part numbers FMLS-XC-001-Y where "X" is E or M and "Y" is B or blank.**
- **Follow module manufacturer's installation instructions to install the module clamps.**
- **Frameless modules require using a Grounding Lug on every rail.**
- **For Sunpreme Modules Only: If required to use slide prevention hardware, see Module Slide Prevention Addendum (Version 1.10).**

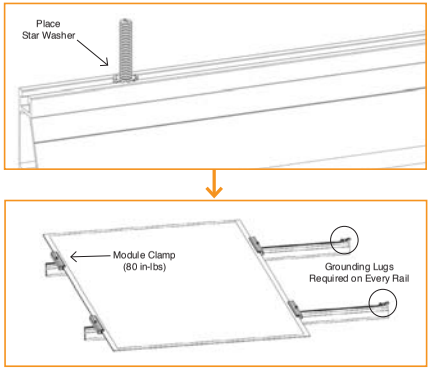

MODULE COMPATIBILITY

The Flush Mount System may be used to ground and/or mount a PV module complying with UL 1703 only when the specific module has been evaluated for grounding and/or mounting in compliance with the included instructions. Unless otherwise noted, "xxx" refers to the module power rating and both black and silver frames are included in the certification.

MAKE	MODELS
Amerisolar	Amerisolar modules with 35, 40 and 50 mm frames AS-bYxxxZ Where "b" can be 5 or 6; "Y" can be M, P, M27, P27, M30, or P30; "xxx" is the module power rating; and "Z" can be blank, W or WB
Astronergy Solar	Astronergy modules with 30, 35, 40 and 45 mm frames aaSMbbyyC/zz-xxx Where "aa" can be CH or A; "bb" can be 60, 66, or 72; "yy" can be blank, 10 or 12; "C" can M, P, M(BL), M-HC, M(BL)-HC, P-HC, (DG), or (DGT); "zz" can be blank, HV, F-B, or F-BH ; and "xxx" is the module power rating Astronergy frameless modules CHSM6610P(DG)-xxx Where "xxx" is the module power rating
Auxin	Auxin modules with 40 mm frames AXN6y6zAxxx Where "y" can be M or P; "z" can be 08, 09, 10, 11, or 12; "A" can be F or T; and "xxx" is the module power rating
Axitec	Axitec Modules with 35 and 40 mm frames AC-xxxY/aaZZb Where "xxx" is the module power rating; "Y" can be M, P or MH; "aa" can be blank, 125- or 156-; "ZZ" can be 54, 60, 72, 120, or 144; "b" can be S or SB
Boviet	Boviet modules with 40mm frames BVM66aaYY-xxx Where "aa" can be 9, 10 or 12; "YY" is M or P; and "xxx" is the module power rating
BYD	Where "xxx" is the module power rating; "Y" can be M, P or MH; "aa" can be blank, 125- or 156-; "ZZ" can be 54, 60, 72, 120, or 144; "b" can be S or SB
Canadian Solar	Canadian Solar modules with 30, 35 and 40 mm frames CSbY-xxxZ Where "b" can be 1, 3 or 6; "Y" can be H, K, P, U, V, W, or X; "xxx" refers to the module power rating; and "Z" can be M, P, MS, PX , M-SD, P-AG, P-SD, MB-AG, PB-AG, MS-AG, or MS-SD Canadian Solar frameless modules CSbY-xxx-Z Where "b" can be 3 or 6; "Y" is K, P, U, or X; "xxx" is the module power rating, and "Z" can be M-FG, MS-FG, P-FG, MB-FG, or PB-FG
CertainTeed	CertainTeed modules with 35 and 40 frames CTxxxYZZ-AA Where "xxx" is the module power rating; "Y" can be M, P or HC; "ZZ" can be 00,01, 10, or 11; and "AA" can be 01, 02, 03 or 04
CSUN	Csun modules with 35 and 40 mm frames YYxxx-zzAbb Where "YY" is CSUN or SST; xxx is the module power rating; "zz" is blank, 60, or 72; and "A" is blank, P or M; "bb" is blank, BB, BW, or ROOF
Ecosolargy	Ecosolargy modules with 35, 40 and 50 mm frames ECOxxxYzzA-bbD Where "xxx" is the module power rating; "Y" can be A, H, S, or T; "zz" can be 125 or 156; "A" can be M or P; "bb" can be 60 or 72; and "D" can be blank or B

MODULE COMPATIBILITY

ET Solar	ET Solar modules with 35, 40 and 50 mm frames ET-Y6ZZxxxAA Where "Y" can be P, L, or M; "ZZ" can be 60 or 72; "xxx" refers to the module power rating; and "AA" can be WB, WW, BB, WBG, WWG, WBAC, WBCO, WWCO, WWBCO or BBAC
Flex	Flex modules with 35, 40 and 50 mm frames and model identifier FXS-xxxYY-ZZ; where "xxx" is the module power rating; "YY" can be BB or BC; and "ZZ" can be MAA1B, MAA1W, MAB1W, SAA1B, SAA1W, SAC1B, SAC1W, SAD1W, SBA1B, SBA1W, SBC1B, or SBC1W
GCL	GCL modules with 35 mm and 40 mm frames GCL-a6/YY xxx Where "a" can be M or P; "YY" can be 60, 72, or 72H; and xxx is the module power rating
GigaWatt Solar	Gigawatt modules with 40 mm frames GWxxxYY Where "xxx" refers to the module power rating; and "YY" can be either PB or MB
Hansol	Hansol modules with 35 and 40 frames HSxxxYY-zz Where "xxx" is the module power rating; "YY" can be PB, PD, PE, TB, TD, UB, UD, or UE; and "zz" can be AN1, AN3, AN4, HV1, or JH2
Hanwha Solar	Hanwha Solar modules with 40, 45 and 50 mm frames HSLaaP6-YY-1-xxxZ Where "aa" can be either 60 or 72; "YY" can be PA or PB; "xxx" refers to the module power rating; and "Z" can be blank or B
Hanwha Q CELLS	Hanwha Q CELLS Modules with 32, 35, 40 and 42mm frames and model identifier aaYY-ZZ-xxx where "aa" can be Q. or B.; "YY" can be PLUS, PRO, PEAK, LINE PRO, LINE PLUS, or PEAK DUO; and "ZZ" can be G3, G3.1, G4, G4.1, L-G2, L-G2.3, L-G3, L-G3.1, L-G3y, L-G4, L-G4.2, L-G4y, LG4.2/TAA, BFR-G3, BLK-G3, BFR-G3.1, BLK-G3.1, BFR-G4, BFR-G4.1, BFR G4.3, BLK-G4.1, G4/SC, G4.1/SC, G4.1/TAA, G4.1/MAX, BFR G4.1/TAA, BFR G4.1/MAX, BLK G4.1/TAA, BLK G4.1/SC, EC-G4.4, G5, BLK-G5, L-G5, L-G5.1, L-G5.2, L-G5.2/H, L-G5.3, G6, G6+, BLK-G6, L-G6, L-G6.1, L-G6.2, L-G6.3, G7, BLK-G6+, BLK-G7, G7.2, G8, BLK-G8, G8+, BLK-G8+ L-G7, L-G7.1, L-G7.2, L-G7.3, L-G8, L-G8.1, L-G8.2, or L-G8.3; and "xxx" is the module power rating
Heliene	Heliene modules with 40 mm frames YYZZxxx Where "YY" can be 36, 60, 72, or 96; "ZZ" can be M, P, or MBLK; and "xxx" is the module power rating
HT-SAAE	HT-SAAE modules with 40 mm frames HT72-156Z-xxx Where "Z" can be M, P, M-C, P-C, M(S), M(VS), M(V), P(V), M(V)-C, P(V)-C; and "xxx" is the module power rating
Hyundai	Hyundai modules with 33, 35, 40 and 50 mm frames HiY-SxxxZZ Where "Y" can be A, M or S; "xxx" refers to the module power rating; and "ZZ" can be HG, HI, KI, MI, MF, MG, RI, RG(BF), RG(BK), SG, TI, or TG
Itek	Itek Modules with 40 and 50 mm frames IT-xxx-YY Where "xxx" is the module power rating; and "YY" can be blank, HE, or SE, or SE72
JA Solar	JA Solar modules with 35, 40 and 45 mm frames JAyyzz-bbww-xxx/aa Where "yy" can be M, P, M6 or P6; "zz" can be blank, (K), (L), (R), (V), (BK), (FA), (TG), (FA)(R), (L)(BK), (L)(TG), (R)(BK), (R)(TG), (V)(BK), (BK)(TG), or (L)(BK)(TG); "bb" can be 48, 60, or 72; "ww" can be S01, S02, S03, S09, or S10; "xxx" is the module power rating; and "aa" can be MP, SI, SC, PR, 3BB, 4BB, 4BB/RE, 5BB
Jinko	Jinko modules with 35 and 40 mm frames JKMYxxxZZ-aa Where "Y" can either be blank or S; "xxx" is the module power rating; "ZZ" can be P, PP, M; and "aa" can be blank, 60, 60B, 60H, 60L, 60BL, 60HL, 60HBL, 60-J4, 60B-J4, 60B-EP, 60(Plus), 60-V, 60-MX, 72, 72-V, 72H-V, 72L-V, 72HL-V or 72-MX Jinko frameless modules JKMxxxPP-DV Where "xxx" is the module power rating
Kyocera	Kyocera Modules with 46mm frames KYxxxZZ-AA Where "Y" can be D or U; "xxx" is the module power rating; "ZZ" can be blank, GX, or SX; and "AA" can be LPU, LFU, UPU, LPS, LPB, LFB, LFBS, LFB2, LPB2, 3AC, 3BC, 3FC, 4AC, 4BC, 4FC, 4UC, 5AC, 5BC, 5FC, 5UC, 6BC, 6FC, 8BC, 6MCA, or 6MPA
LG	LG modules with 35, 40 and 46 mm frames LGxxxYaZ-bb Where "xxx" is the module power rating; "Y" can be A, E, N, Q, S; "a" can be 1 or 2; "Z" can be C, K, T, or W; and "bb" can be A3, A5, B3, G3, G4, K4, or V5
Longi	Longi modules with 30, 35 and 40 mm frames LRa-YYZZ-xxxM Where "a" can be 4 or 6; "YY" can be blank, 60 or 72; "ZZ" can be blank, BK, BP, HV, PB, PE, PH, HBD, HPB, or HPH; "xxx" is the module power rating
Mission Solar	Mission Solar modules with 40 mm frames MSEbbxxxZZaa Where "bb" can be blank or 60A; "xxx" is the module power rating; "ZZ" can be blank, MM, SE, SO or SQ, and "aa" can be blank, 1J, 4J, 4S, 5K, 5T, 6J, 6S, 6W, 8K, 8T, or 9S
Mitsubishi	Mitsubishi modules with 46 mm frames PV-MYYxxxZZ Where "YY" can be LE or JE; xxx is the module power rating; and "ZZ" can be either HD, HD2, or FB

IRONRIDGE

FlashFoot2

The Strongest Attachment in Solar

IronRidge FlashFoot2 raises the bar in solar roof protection. The unique water seal design is both elevated and encapsulated, delivering redundant layers of protection against water intrusion. In addition, the twist-on Cap perfectly aligns the rail attachment with the lag bolt to maximize mechanical strength.

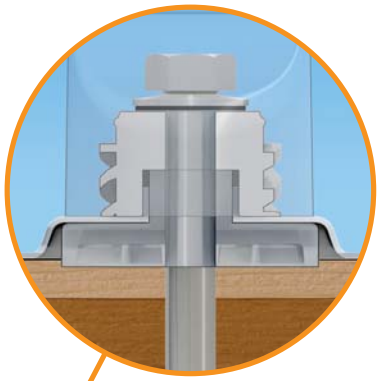

Three-Tier Water Seal

FlashFoot2's seal architecture utilizes three layers of protection. An elevated platform diverts water away, while a stack of rugged components raises the seal an entire inch. The seal is then fully-encapuslated by the Cap. FlashFoot2 is the first solar attachment to pass the TAS-100 Wind-Driven Rain Test.

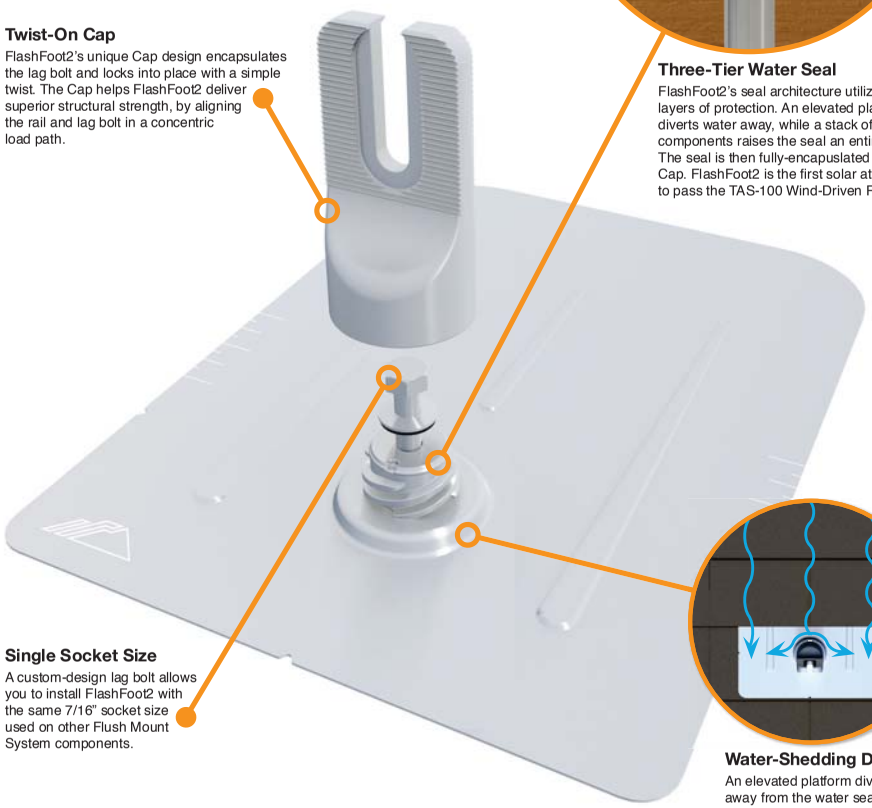

Twist-On Cap

FlashFoot2's unique Cap design encapsulates the lag bolt and locks into place with a simple twist. The Cap helps FlashFoot2 deliver superior structural strength, by aligning the rail and lag bolt in a concentric load path.

Single Socket Size

A custom-design lag bolt allows you to install FlashFoot2 with the same 7/16" socket size used on other Flush Mount System components.

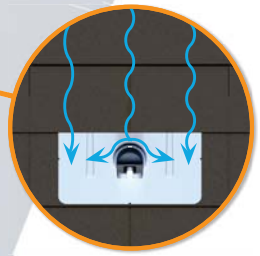

Water-Shedding Design

An elevated platform diverts water away from the water seal.

Tech Brief

Installation Features

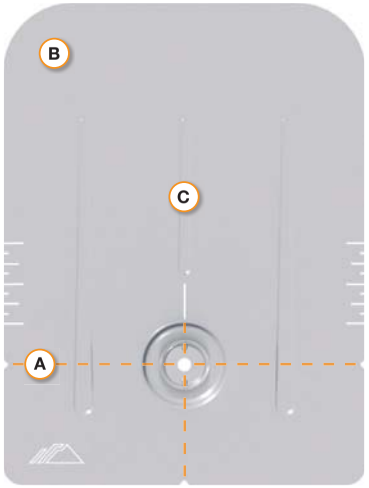

A Alignment Markers

Quickly align the flashing with chalk lines to find pilot holes.

B Rounded Corners

Makes it easier to handle and insert under the roof shingles.

C Reinforcement Ribs

Help to stiffen the flashing and prevent any bending or crinkling during installation.

Benefits of Concentric Loading

Traditional solar attachments have a horizontal offset between the rail and lag bolt, which introduces leverage on the lag bolt and decreases uplift capacity.

FlashFoot2 is the only product to align the rail and lag bolt. This concentric loading design results in a stronger attachment for the system.

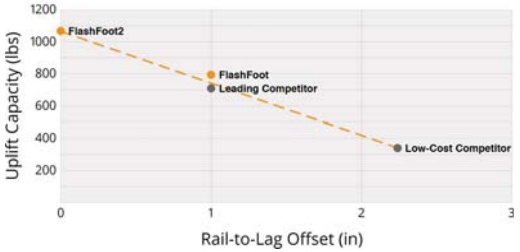

Testing & Certification

Structural Certification

Designed and Certified for Compliance with the International Building Code & ASCE/SEI-7.

Water Seal Ratings

Water Sealing Tested to UL 441 Section 27 "Rain Test" and TAS 100-95 "Wind Driven Rain Test" by Intertek. Ratings applicable for composition shingle roofs having slopes between 2:12 and 12:12.

UL 2703

Conforms to UL 2703 Mechanical and Bonding Requirements. See Flush Mount Install Manual for full ratings.

© 2016 IronRidge, Inc. All rights reserved. Visit www.ironridge.com or call 1-800-227-9523 for more information. Version 1.0