1107 & 1109 Hull Street

City of Chesapeake
Department of Planning

Record Summary for Certificate of Appropriateness

Record Detail Information

Record Type: Certificate of Appropriateness

Record Status: Closed

File Date: March 24, 2020

Record Number: PLN-CAPP-2020-035

Expiration Date:

Description:

Record Name: 1107 & 1109 Hull St

Paint soffits white. Replace 1107 & 1109 side porches with treated wood. Install 7' x 30' asphalt driveway at 1107 & 1109. Replace front porch with rails with wrought iron. Paint existing wrought iron black. Repair vinyl siding in back of building.

Parent Record Number:

Address: 1107 Hull ST

Owner Information

Primary	Owner Name	Owner Address	Owner Phone
Yes	Alvin Carter	1636 Chesapeake Dr, Chesapeake, VA 23324	[redacted]

Parcel Information

Parcel No:
1270000002920

Contact Information

Name	Organization Name	Contact Type	Phone
Alvin Thomas Carter		Applicant	[redacted]

Address
1636 Chesapeake dr, Chesapeake, VA 23324

Application Specific Information

NATURE OF THE APPLICATION

Description	Paint soffits white. Replace 1107 & 1109 side porches with treated wood. Install 7' x 30' asphalt driveway at 1107 & 1109. Replace front porch with rails with wrought iron. Paint existing wrought iron black. Repair vinyl siding in back of building.
Zoning Sign Off	No
Economic Hardship	No

PLANNING STAFF TO COMPLETE

Application After-the-Fact	-
After-the-Fact Fee Paid	-
Approved Administratively	-
Approving Planner	-
Approval Date	-

Certificate Number	-
See supplemental submittal requirements	-
Board Approved Certificate Number	-
I, _____, hereby grant permission for City Staff & members of the Historic Architectural Review Board to enter my site to view exterior areas related to theis Certificate of Appropriateness Application.	-
Structure Designation	-

GENERAL INFORMATION

Year Structure Built	1914
Is this an After-the-Fact application?	No
$250 After the Fact fee, if required.	UNCHECKED
One original delivered to the Planning Department OR a copy attached to the on-line application	UNCHECKED
One disk containing all photos OR photos attached to on-line application	CHECKED
☐ Completed and notarized power of attorney form if the applicant is not the property owner.	UNCHECKED

NEW CONSTRUCTION

Completed application form.	UNCHECKED
☐ Surveyed site plan (including proposed buildings, structure(s), parking, etc.).	UNCHECKED
Front and side elevations	UNCHECKED
Samples	UNCHECKED
Arrangement of proposed exterior lighting.	UNCHECKED
Photographs of the property and adjoining or opposite properties.	UNCHECKED

ADDITIONS TO EXIST. STRUCTURES

Completed application form.	UNCHECKED
Surveyed site plan or city tax map	UNCHECKED
Elevations	UNCHECKED
Photographs of the existing structure and property.	UNCHECKED
Samples, photos, and brochures	UNCHECKED
Arrangement of proposed exterior lighting.	UNCHECKED
☐ Proposed signs with appropriate detail as to character and location.	UNCHECKED

ALTERATIONS OR REPAIRS

Completed application form.	UNCHECKED
Written description of work to be performed	CHECKED
Photographs of the building/structure.	CHECKED
2 quotes each are required for the following:	CHECKED
Photos numerically keyed	UNCHECKED

RELOCATIONS

Completed application form	UNCHECKED
☐ Photographs of the building or structure to be relocated and adjacent properties.	UNCHECKED
☐ Photographs of the premises to which the building or structure will be relocated.	UNCHECKED
☐ Written description of reasons for the relocation and the proposed use of the vacated property.	UNCHECKED

DEMOLITIONS

Completed application form	UNCHECKED
☐ Photographs of the building or structure to be demolished to illustrate its state of disrepair.	UNCHECKED
Written report on condition of building or structure.	UNCHECKED
Written description of work to be performed	UNCHECKED

METAL ROOFS

Explanation	UNCHECKED

SPECIAL POWER OF ATTORNEY

Special Power of Attorney attached	UNCHECKED

METAL ROOFS

Info required to replace metal roof with metal roof.	UNCHECKED
Picture	UNCHECKED
Specification Sheet	UNCHECKED
Roof color sample	UNCHECKED
Info required to replace metal roof with architectural shingles.	UNCHECKED
Quotes	UNCHECKED
Roof color sample (asphalt)	UNCHECKED

1109 Hull St
Chesapeake, Virginia
Google
Street View
Grady St
Porter St
Ohio St
Decatur St
Jefferson St
460
Google

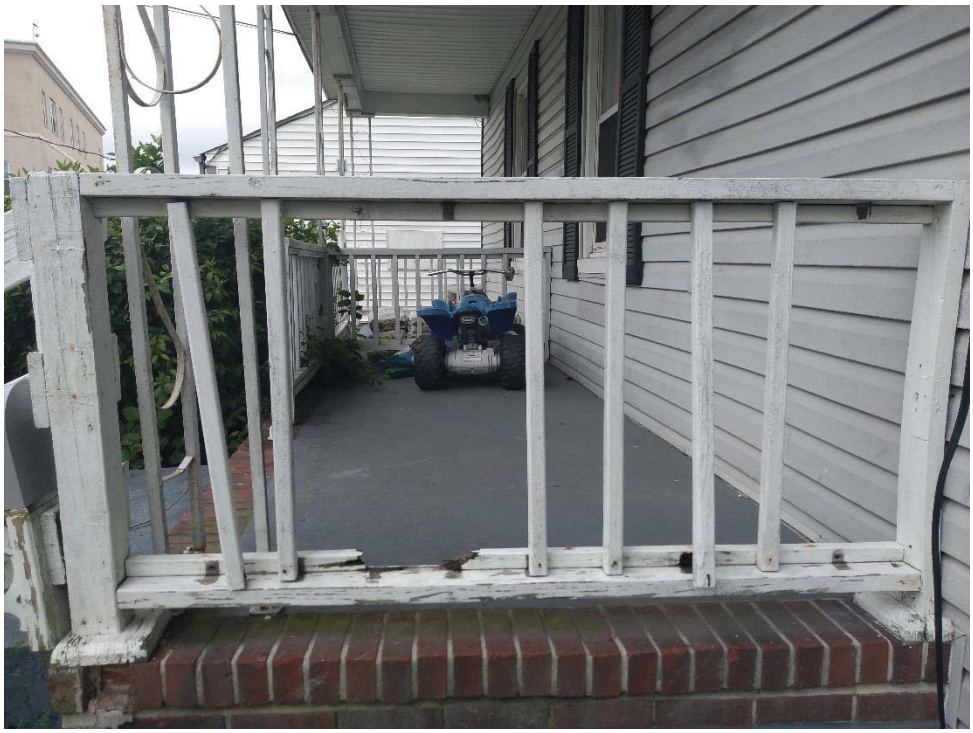

Chesapeake Lowe's >
Open till 7PM

What are you looking for today?

Shop Ideas Savings Services

Order Status Lowe's Credit Cards Weekly Ad

Building Supplies > Decking & Porches > Deck Railings > Deck Rails

Item # 89139 Model # 605

Gilpin (Common: 6-ft; Actual: 1.25-in x 32-in x 6-ft) Hampton Black Metal Deck Universal Rail

1 Rating
5.0 Average

100%
Recommend this product

Community Q&A
View Now

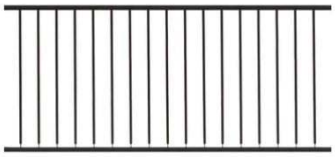

$80.07

- Hampton uses 1-1/4-in sculpted steel channel with 1/2-in tube spindles
- Installed height 36-in, railing height 32-in, spindle spacing 4-in on center
- Strong, welded construction, coated with black, baked-on finish, touch up required

1 ADD TO CART

SAVE SHARE

Ships to Store FREE
Ready for pickup: Estimated by 05/26/2020

Delivery
Ready for delivery: Estimated on 05/26/2020

Post, flange, and fitting set sold separately

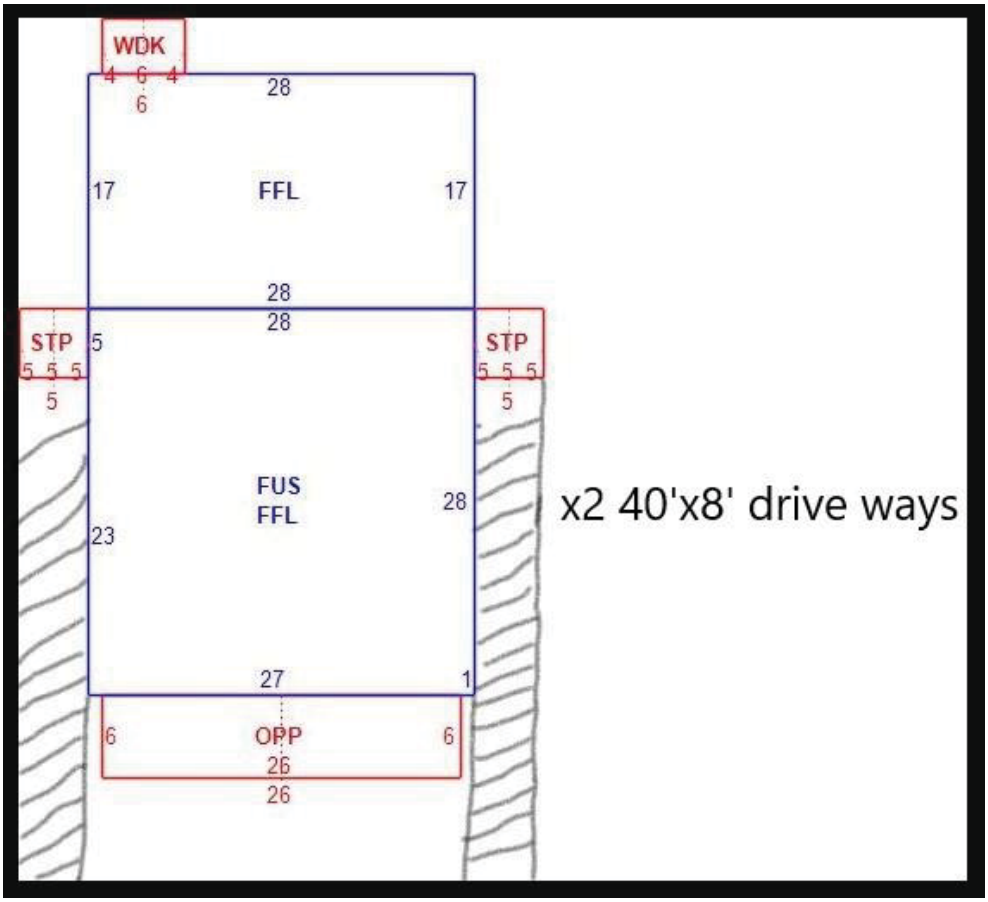

1203 Chesapeake Avenue

City of Chesapeake
Department of Planning

Record Summary for Certificate of Appropriateness

Record Detail Information

Record Type: Certificate of Appropriateness

Record Status: Open

File Date: February 24, 2020

Record Number: PLN-CAPP-2020-021

Expiration Date:

Description:

Record Name: Exterior Stairs

We would like to build an exterior stair to an existing 2nd floor balcony. Our preferred type of stair is a spiral stair painted black or white to match colors of the house. We believe the spiral is the simplest option. It is also the most elegant option and fits the style of the house by being the least obtrusive in the yard space. We also had a deck builder mock up what wood stairs would like. See the attachments (exterior stair A, B, and C) to see the various options we are considering. We also need approval to fix a falling soffit on the roof just above the balcony. And we need approval to fix missing and loose bricks along the Ohio Street side of the house. We also need approval to paint the existing balcony rails white, replace missing lattice work on the left side of the balcony, and paint the floorboards a dark grey color (same color as porch floor). Finally, we need approval to add gold house numbers to the window transom so that it is more visible from the street. See attachment labeled "Window Transom Address Numbers" for an example of what we want.

Parent Record Number:

Address: 1203 CHESAPEAKE AVE, CHESAPEAKE, VA 23324

Owner Information

Primary	Owner Name	Owner Address	Owner Phone
Yes	PALMER-MCCALLA MYKELLA D & JOSHUA P	1203 Chesapeake Ave, Chesapeake, VA 23324	[redacted]

Parcel Information

Parcel No:
1280000000910

Contact Information

Name	Organization Name	Contact Type	Phone
Mykella Palmer-McCalla		Applicant	[redacted]

Address
1203 CHESAPEAKE AVE, CHESAPEAKE, VA 23324

Application Specific Information

NATURE OF THE APPLICATION

Description

Add exterior spiral stair (or wood stairs + deck)
Fix falling soffit on back of house
Fix loose and missing bricks on Ohio side of house
Paint existing balcony white and replace missing lattice
Add gold address numbers to window transom above front door

Zoning Sign Off: No

Economic Hardship: No

PLANNING STAFF TO COMPLETE

Application After-the-Fact	-
After-the-Fact Fee Paid	-
Approved Administratively	-
Approving Planner	-
Approval Date	-
Certificate Number	-
See supplemental submittal requirements	-
Board Approved Certificate Number	-
I, _____, hereby grant permission for City Staff & members of the Historic Architectural Review Board to enter my site to view exterior areas related to theis Certificate of Appropriateness Application.	-
Structure Designation	-

GENERAL INFORMATION

Year Structure Built	1896
Is this an After-the-Fact application?	No
$250 After the Fact fee, if required.	UNCHECKED
One original delivered to the Planning Department OR a copy attached to the on-line application	UNCHECKED
One disk containing all photos OR photos attached to on-line application	UNCHECKED
☐ Completed and notarized power of attorney form if the applicant is not the property owner.	UNCHECKED

NEW CONSTRUCTION

Completed application form.	UNCHECKED
☐ Surveyed site plan (including proposed buildings, structure(s), parking, etc.).	UNCHECKED
Front and side elevations	UNCHECKED
Samples	CHECKED
Arrangement of proposed exterior lighting.	UNCHECKED
Photographs of the property and adjoining or opposite properties.	UNCHECKED

ADDITIONS TO EXIST. STRUCTURES

Completed application form.	UNCHECKED
Surveyed site plan or city tax map	UNCHECKED
Elevations	UNCHECKED
Photographs of the existing structure and property.	UNCHECKED
Samples, photos, and brochures	UNCHECKED
Arrangement of proposed exterior lighting.	UNCHECKED
☐ Proposed signs with appropriate detail as to character and location.	UNCHECKED

ALTERATIONS OR REPAIRS

Completed application form.	UNCHECKED
Written description of work to be performed	UNCHECKED
Photographs of the building/structure.	CHECKED
2 quotes each are required for the following:	UNCHECKED
Photos numerically keyed	UNCHECKED

RELOCATIONS

Completed application form	UNCHECKED
☐ Photographs of the building or structure to be relocated and adjacent properties.	UNCHECKED
☐ Photographs of the premises to which the building or structure will be relocated.	UNCHECKED
☐ Written description of reasons for the relocation and the proposed use of the vacated property.	UNCHECKED

DEMOLITIONS

Completed application form	UNCHECKED
☐ Photographs of the building or structure to be demolished to illustrate its state of disrepair.	UNCHECKED
Written report on condition of building or structure.	UNCHECKED
Written description of work to be performed	UNCHECKED

METAL ROOFS

Explanation	UNCHECKED

SPECIAL POWER OF ATTORNEY

Special Power of Attorney attached	UNCHECKED

METAL ROOFS

Info required to replace metal roof with metal roof.	UNCHECKED
Picture	UNCHECKED
Specification Sheet	UNCHECKED
Roof color sample	UNCHECKED
Info required to replace metal roof with architectural shingles.	UNCHECKED
Quotes	UNCHECKED
Roof color sample (asphalt)	UNCHECKED

Joshua McCalla
Mykella Palmer-McCalla
1203 Chesapeake Ave
Chesapeake, VA 23324

Nathan Lamb
City of Chesapeake Planning Department
306 Cedar Road
Chesapeake, VA 23322

Re: Exterior Stair Proposal

Per the Historic Architectural Review Board's request at the meeting on March 5, 2020, we have prepared some additional renderings of what a spiral stair will look like when attached to the house. Please see the following attachments:

1. **Manufacturer's Rendering of Stairs**
2. **Location A** – Architect's to-scale rendering of what stairs will look when located at the back of the house and visible from Ohio Street – our preferred location.
3. **Location B** – Architect's to-scale rendering of what stairs will look like when located at the side of the house and not visible from Ohio Street.
4. **Comparison** – A comparison of two renderings; One shows the neighborhood's common exterior stair design attached to the house. One shows the spiral stair design.

We prefer adding the spiral stair to the back of the house (Labeled "Location A" in attachments). The back is the best location. It leaves the walking path from the carport to the side porch steps uninterrupted. However, the stair will be visible from Ohio Street when located here.

We are willing to locate the stair at the side of the house (Labeled "Location B" in attachments). Board approval is likely not necessary in this case as the stair will not be visible in its entirety from Ohio Street. If there is any visibility, it will only be a small portion, and it will not be recognizable as a stair.

Exterior two-story stairs are a common feature of the neighborhood. The traditional design is a simple wood stair. We considered that design, but it is unattractive and takes up too much yard space. Not only is a spiral stair more compatible with the elegant style of the house, but it is also more discreet. See the comparison attached (Labeled "Comparison" in attachments).

The handbook does not address spiral stairs, but they are an excellent alternative when dealing with tight spaces. Approval of locating the spiral stair at the back of the house is an opportunity for the board to elevate the style of exterior stair options available.

Please let us know if you need any additional information.

Best,

JOSHUA & MYKELLA

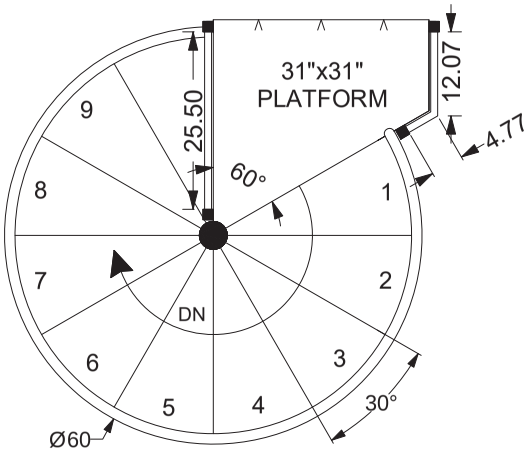

UPPER LEVEL
HEADROOM: 90.74

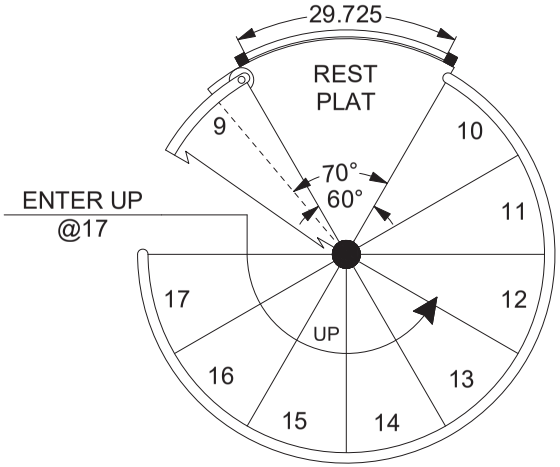

ENTRY LEVEL

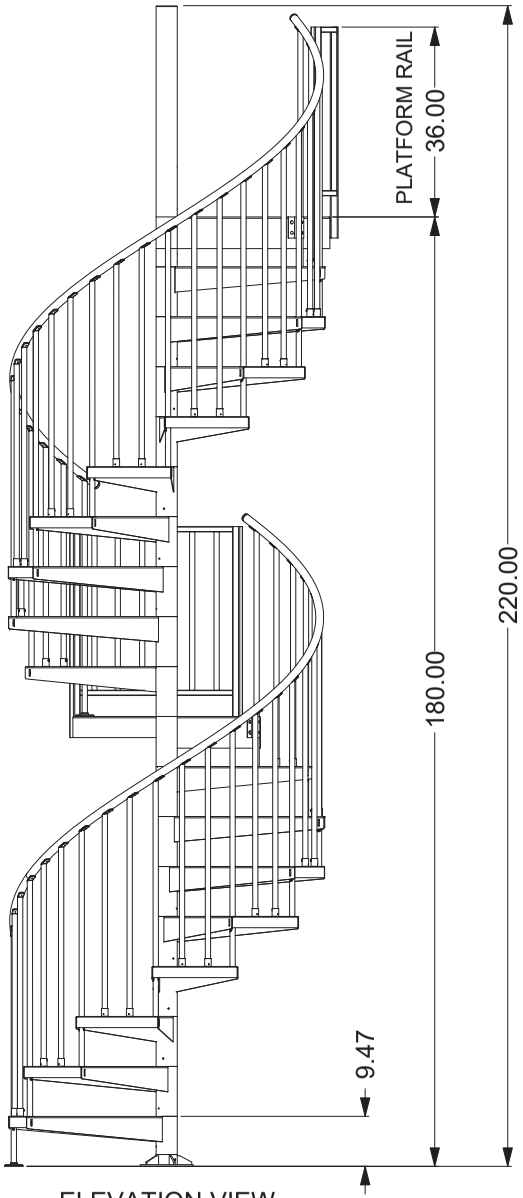

ELEVATION VIEW

STAIR DETAILS:
MODEL: CLASSIC STEEL
DIAMETER (IN.): 60
FLOOR TO FLOOR (IN.): 180.00
COLOR: PRIMED
RISER HEIGHT (IN.): 9.47
TREAD DEGREE: 30
HEADROOM (IN.): 90.74

DIAMOND PLATE

SIGNATURE OF APPROVAL:

CLIENT: Mykella PalmerMcCalla

PROJECT:

REVISIONS

REV.	DATE	DESCRIPTION

PLAN DATE: 3/11/20
SCALE: N.T.S.
DRAWN:
DESIGNED BY: -
APPROVED BY: -
FIELD MOD.: -

TITLE: 222430-304181

105 G.P. CLEMENT DRIVE
COLLEGEVILLE, PA 19426
1-800-368-8280

Paragon Stairs

JOB No: P-222430

DRAWING No: REV 3

Location A

Spiral stair located at back of house and visible from Ohio Street

Rendering: View from Ohio Street of back of house with Spiral Stair located at back of house

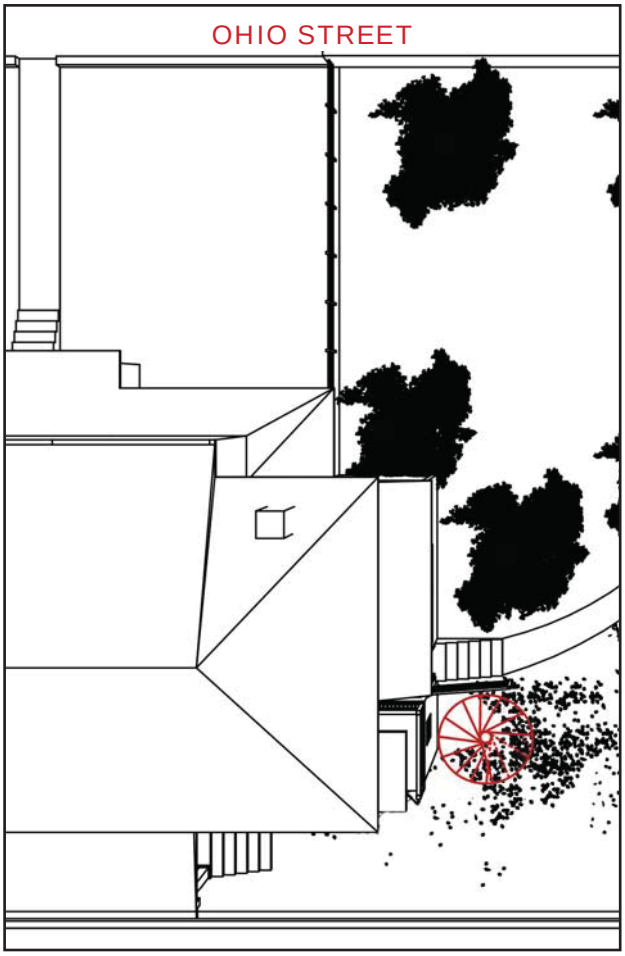

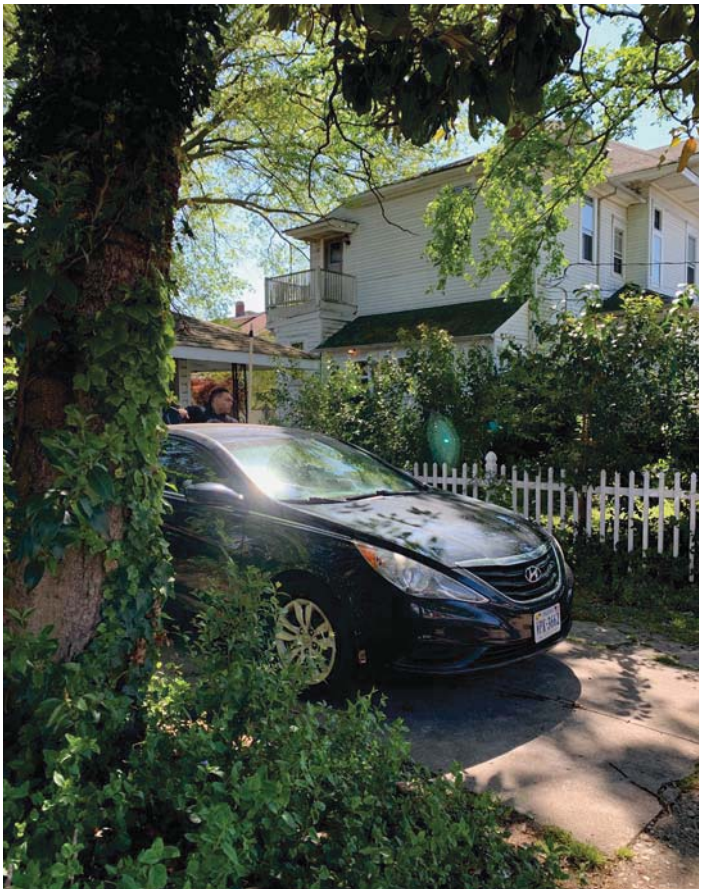

Photo: View from Ohio Street of back of house

Location B

Spiral stair located at side of house.

Rendering: View from Ohio Street of back of house with Spiral Stair located at the side of house

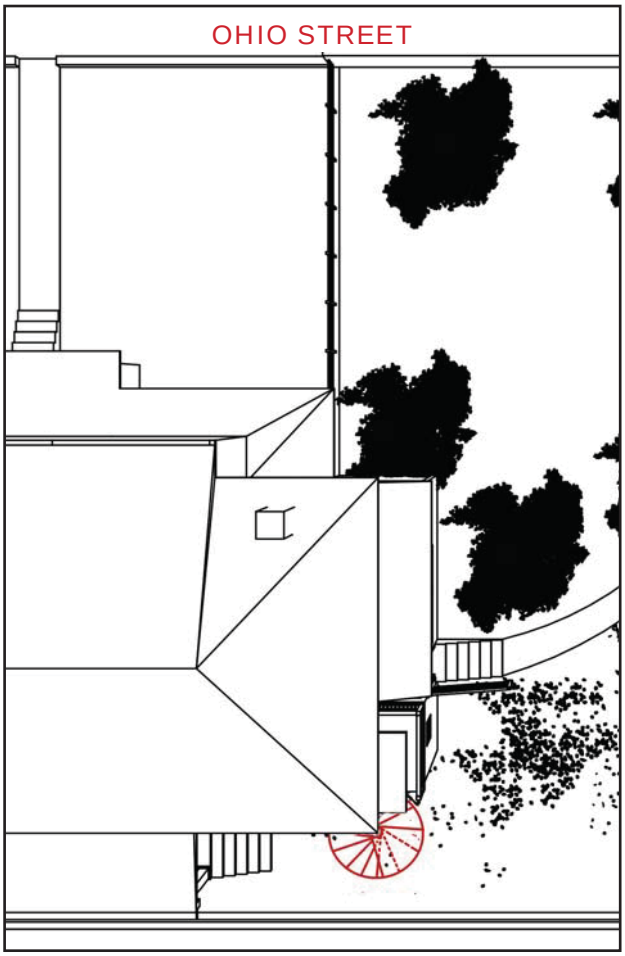

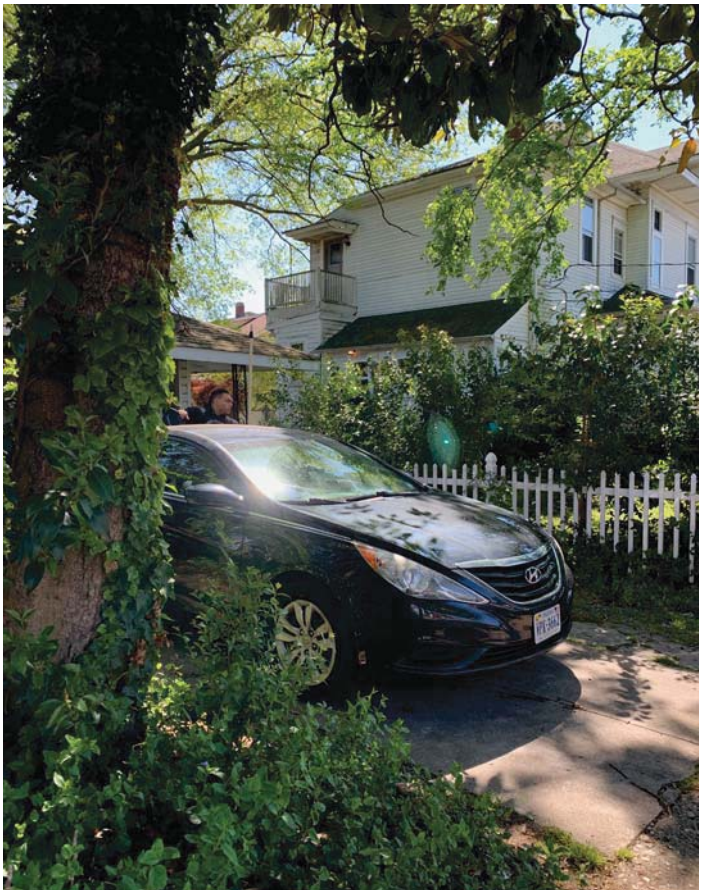

Photo: View from Ohio Street of back of house

Comparison

Common neighborhood stair compared to Spiral Stair alternative.

Simple two-story wood stair common to South Norfolk backyards.

More discreet spiral stair altenrative.

1118 Rodgers Street

City of Chesapeake
Department of Planning

Record Summary for Certificate of Appropriateness

Record Detail Information

Record Type: Certificate of Appropriateness
Record Status: Open
File Date: April 27, 2020
Record Number: PLN-CAPP-2020-057
Expiration Date:
Description:
Record Name: 1118 Rodgers St
I would like to build a 22 foot wide by 25 foot deep and 12 foot high detached garage on my property.
Parent Record Number:

Address: 1118 Rodgers ST

Owner Information

Primary	Owner Name	Owner Address	Owner Phone
Yes	Jessica Legrand	1118 Rodgers St, Chesapeake, VA 23324	[redacted]

Parcel Information

Parcel No:
1270000004440

Contact Information

Name	Organization Name	Contact Type	Phone
Jessica Eileen LeGrand		Applicant	[redacted]

Address
1118 Rodgers Street, Chesapeake, VA 23324

Application Specific Information

NATURE OF THE APPLICATION

Description: New construction of a 22 x 25 x 12 tall metal sided garage on the rear right side of my lot. The building will be from eaglecarports.com I have modified the building to have horizontal ridges that closely match the horizontal siding on my house. The color scheme will also match my house with a yellow over burgundy. I will be asking the company if they can make a modification to change the roof pitch so it can more closely match the roof of my home. I have included a copy of our lot survey with a location for the garage called out. I have also included a rendering of the garage from the companies website as well as 2 sample photos from their gallery. We have chose to go with a prefab metal garage as it is 50% to 60% more affordable for our family. I have also included 2 quoted generic prices from 2 local garage companies that would be for a stick built and vinyl sided structure.

Zoning Sign Off: No

Economic Hardship: No

PLANNING STAFF TO COMPLETE

Application After-the-Fact	-
After-the-Fact Fee Paid	-
Approved Administratively	-
Approving Planner	-
Approval Date	-
Certificate Number	-
See supplemental submittal requirements	-
Board Approved Certificate Number	-
I, _____, hereby grant permission for City Staff & members of the Historic Architectural Review Board to enter my site to view exterior areas related to theis Certificate of Appropriateness Application.	-
Structure Designation	-

GENERAL INFORMATION

Year Structure Built	New Construction
Is this an After-the-Fact application?	No
$250 After the Fact fee, if required.	UNCHECKED
One original delivered to the Planning Department OR a copy attached to the on-line application	CHECKED
One disk containing all photos OR photos attached to on-line application	UNCHECKED
☐ Completed and notarized power of attorney form if the applicant is not the property owner.	UNCHECKED

NEW CONSTRUCTION

Completed application form.	CHECKED
☐ Surveyed site plan (including proposed buildings, structure(s), parking, etc.).	CHECKED
Front and side elevations	CHECKED
Samples	CHECKED
Arrangement of proposed exterior lighting.	UNCHECKED
Photographs of the property and adjoining or opposite properties.	UNCHECKED

ADDITIONS TO EXIST. STRUCTURES

Completed application form.	UNCHECKED
Surveyed site plan or city tax map	UNCHECKED
Elevations	UNCHECKED
Photographs of the existing structure and property.	UNCHECKED
Samples, photos, and brochures	UNCHECKED
Arrangement of proposed exterior lighting.	UNCHECKED
☐ Proposed signs with appropriate detail as to character and location.	UNCHECKED

ALTERATIONS OR REPAIRS

Completed application form.	UNCHECKED

Written description of work to be performed	UNCHECKED
Photographs of the building/structure.	UNCHECKED
2 quotes each are required for the following:	UNCHECKED
Photos numerically keyed	UNCHECKED

RELOCATIONS

Completed application form	UNCHECKED
☐ Photographs of the building or structure to be relocated and adjacent properties.	UNCHECKED
☐ Photographs of the premises to which the building or structure will be relocated.	UNCHECKED
☐ Written description of reasons for the relocation and the proposed use of the vacated property.	UNCHECKED

DEMOLITIONS

Completed application form	UNCHECKED
☐ Photographs of the building or structure to be demolished to illustrate its state of disrepair.	UNCHECKED
Written report on condition of building or structure.	UNCHECKED
Written description of work to be performed	UNCHECKED

METAL ROOFS

Explanation	UNCHECKED

SPECIAL POWER OF ATTORNEY

Special Power of Attorney attached	UNCHECKED

METAL ROOFS

Info required to replace metal roof with metal roof.	UNCHECKED
Picture	UNCHECKED
Specification Sheet	UNCHECKED
Roof color sample	UNCHECKED
Info required to replace metal roof with architectural shingles.	UNCHECKED
Quotes	UNCHECKED
Roof color sample (asphalt)	UNCHECKED

This is to certify that on March 26, 2020 I surveyed the property shown. The buildings stand within the title lines and there are no encroachments of other buildings on the property.

General Notes:

1. This survey is based on a subdivision plat recorded in the Clerk's Office of the Circuit Court of the City of Chesapeake, Virginia in Map Book 2 Page 56.
2. This survey was performed without the benefit of a current title report and does not attempt to depict all title matters and easements currently affecting this property.
3. The existence of wetlands, hazardous wastes, or underground utilities was neither investigated nor confirmed during the performance of this survey.
4. By scaled map location and graphic plotting only, the property shown hereon appears to lie within flood zone 'X' as shown on the National Flood Insurance Program's, Flood Insurance Rate Maps, community number 510034, panel 0008 D, dated December 16, 2014.
5. This survey was performed for the sole and exclusive benefit of the entities listed hereon and shall not be relied upon by any other entity or individual whomsoever. No modification or reproduction of this document may be made without the written permission of Warren and Associates, PC.

COMMONWEALTH OF VIRGINIA
R.L. HARWOOD
Lic. No. 3317
3-27-2020
LAND SURVEYOR

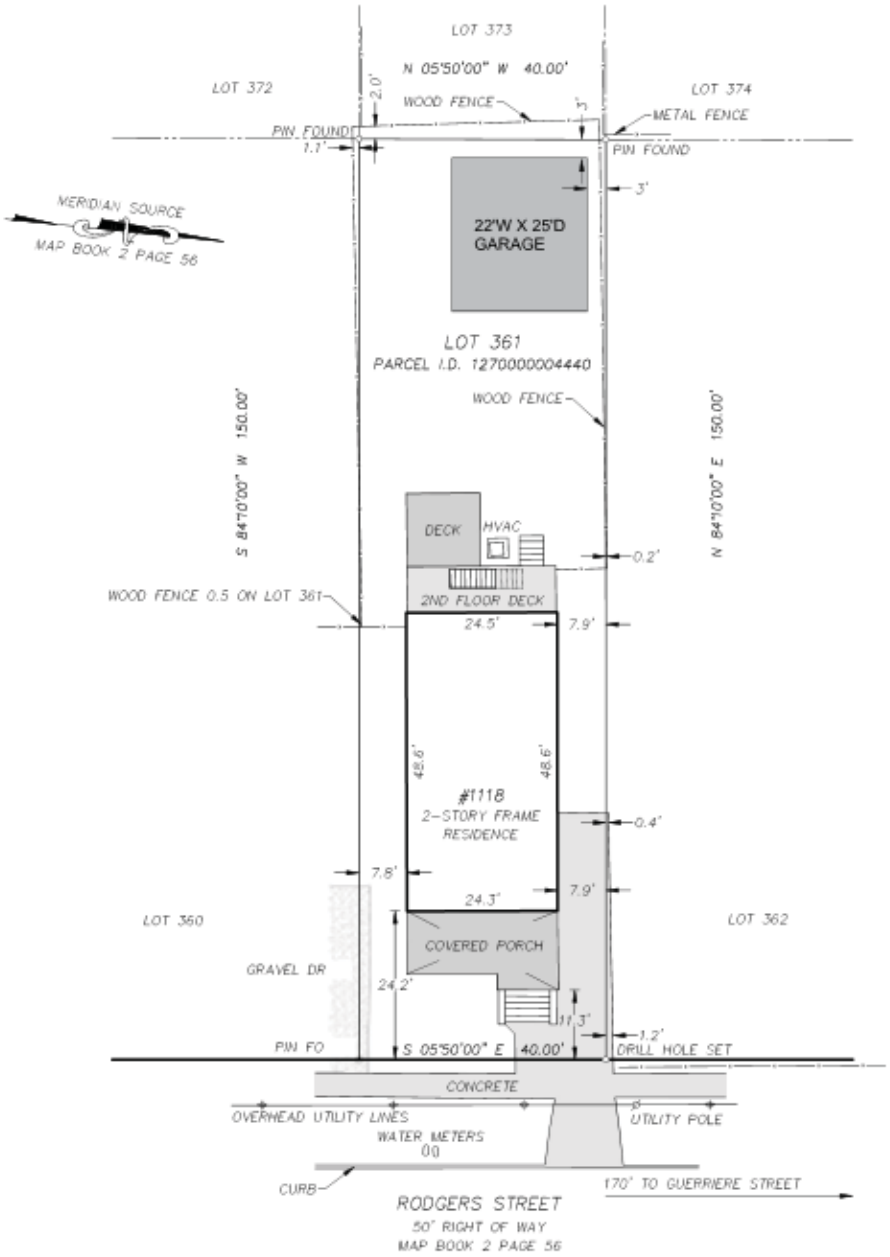

PHYSICAL IMPROVEMENTS SURVEY OF:

LOT 361

PLAT ENTITLED:

"PLAN OF PROPERTY NEAR BERKLEY
D.E. FROST OWNER"

SOUTH NORFOLK
CHESAPEAKE, VIRGINIA

EXCLUSIVELY FOR:

DOUGLAS KENT & JESSICA E. LEGRAND

SCALE: 1" = 20' MARCH 31, 2020

WARREN & ASSOCIATES, PC
LAND SURVEYORS
3933 Indian River Road
Virginia Beach, Virginia 23456
757-471-0572

PROJECT: 1118 RODGERS STREET

1118

MC BUILDERS

GARAGE PRICES

MC Builders is NOT responsible for damage to your yard or driveway. The customer takes full responsibility. If we cannot drive the concrete truck on the driveway there is an option to have the concrete pumped in for an additional $400.

SIZE	1-STORY	1.5 STORY	BARN	W/DORMERS	FULL 2-STORIES
12x20	$10,999	$12,999	$14,999	$16,999	$17,999
14x20	$14,999	$16,999	$18,999	$19,999	$20,999
16x20	$16,500 (special)	$18,999	$20,999	$21,999	$23,999
16x24	$18,999	$20,999	$22,999	$24,999	$24,999
18x20	$18,999 (special)	$20,999	$22,999	$24,999	$25,999
18x24	$20,999	$22,999	$24,999	$26,999	$27,999
20x20	$19,999 (special)	$23,500	$25,500	$27,500	$28,500
20x24	$23,500	$26,500	$28,500	$29,999	$30,999
20x30	$28,999	$32,999	$34,999	$36,999	$37,999
24x24	$25,999	$29,999	$31,999	$34,500	$35,999
24x30	$29,999	$35,999	$37,999	$40,999	$42,999
24x32	$31,999	$37,999	$39,999	$42,999	$44,999
24x36	$35,999	$41,999	$43,999	$47,999	$49,999
24x40	$39,999	$46,999	$49,999	$52,500	$53,999
24x48	$47,999	$54,999	$57,999	$59,500	$62,999
26x26	$29,999	$34,999	$36,999	$40,500	$40,999
26x30	$33,999	$39,999	$41,999	$44,500	$45,999
26x36	$39,999	$46,999	$48,999	$51,500	$52,999
36x40	$43,999	$51,999	$53,999	$56,500	$57,999
26x48	$52,999	$59,999	$62,999	$64,500	$65,999
30x30*	$39,999	$47,999	$49,999	$53,500	$54,999
30x36*	$46,999	$54,999	$57,999	$61,500	$62,999
30x40*	$53,999	$60,999	$63,999	$64,500	$65,999
30x48*	$62,999	$69,999	$72,999	$74,500	$75,999
32x32*	$45,999	$53,999	$55,999	$58,500	$59,999
32x40*	$54,999	$62,999	$65,999	$69,500	$70,999
32x48*	$63,999	$72,999	$75,999	$79,500	$79,999

*Will require a center post/beam

Prices are subject to change without notice. We must have access to your backyard for the concrete truck, material delivery, roofing truck, etc. If we do not charges will apply.

24x24

Starting at *$17,995*

All garages include:

Building Permit
Slab Foundation
Insulated Garage Doors
Windows and Entry Door
Vinyl Siding W/Aluminum Wrapped Trim

Contact Us (contact.html)

Other Sizes

20x24 (20x24.html)

(20x24.html)
(20x24.html)24x30 (24x30.html)
(24x30.html)
(24x30.html)28x36 (28x36.html)
(28x36.html)
(28x36.html)30x50 (30x50.html)
(30x50.html)

(30x50.html)
(30x50.html)

(30x50.html)
(30x50.html)
Copyright (30x50.html) MCS Computers (http://www.mcscomputers.com/)

Estimate for 23324: $7,575.00
Rent-to-Own payments as low as $315.63/month (plus tax)

22' W x 25' L x 12' H

1416 Chesapeake Avenue

Chesapeake VIRGINIA

Application for Certificate of Appropriateness

CHESAPEAKE PLANNING DEPARTMENT

APPLICATION NUMBER: _____
(Assigned by Chesapeake Planning Department)

1. **Address/Location of Project:** 1416 Chesapeake Ave
2. **Year Structure Built (or write "new construction"):** Ca. 1900
3. **Applicant(s):** Renee & Jerry Waters
   Address: 1416 Chesapeake Ave
   City: Chesapeake State: VA Zip: 23324
   Daytime Phone: [redacted] FAX Number: _____
   E-mail address: [redacted]
4. **Owner:** (If different from applicant)
   Name: Same
   Address: _____
   City: _____ State: ____ Zip: _____
   Daytime Phone: _____ FAX Number: _____
   E-mail address: _____

Signature of Applicant/Agent & Date: Renee Waters

5. **Detailed Description of Scope of Work** (add additional typed sheets if necessary):

Demo Non Contributing Structure! Garage built Ca 1970
Build 14X18 Shed cover w/ willow green dutch lap siding and white trim, soffits, fascia, and frieze. Black architectural shingles, single door, steel 6 panel in front and white 2 over 2 window (24x36)

For new construction, additions, driveways, fences, etc. has Zoning signed off on the application? YES _____ NO_____

6. **Will you be applying for consideration of a financial hardship determination? (please ✓all that apply)**

   ☐ Make temporary alterations, renovations, or repairs as part of the temporary certificate of appropriateness process

   ☐ Demolish the structure

   ☐ Replace a historic material roof with an architectural shingle roof or comparable substitute material roof

Planning Staff to Complete:

Is the Application After the Fact? YES _____ NO__x____

If so, request payment of $250 fee.

Can Application be administratively approved? **(See pages 1-2 of the instructions)** If so, provide date of approval_____(Date) by_____(Planner Name)

Certificate Number_____. No

Determination of the Financial Hardship Committee if the applicant has applied for a temporary alteration, renovation or repair, demolition of a structure, and/or replacement of a historic material roof with architectural shingles or a comparable substitute material. N/A YES _____ NO_____

If application needs to go to Board, please provide the date of the next meeting June 4, 2020 (see calendar and deadlines). **See pages 2-3 of the instructions for supplemental submittal requirements.**

Certificate Number_____.

If application goes to Board, have the applicant complete the following:

I, Renee Waters, *hereby grant permission for City staff & City Council appointed members of the Historic and Architectural Review Board to enter my site to view the exterior areas that are the subject of the application and which are viewable from a public right of way.*

I understand and agree that the Historic and Architectural Review Board onsite inspections shall be exclusively related to this Certificate of Appropriateness Application and that reasonable notice shall be given to the property owners/applicants prior to any onsite inspections. I further agree that any onsite inspections shall be conducted as necessary and at the sole discretion of City staff and the Historic and Architectural Review Board until the Historic and Architectural Review Board has taken final action on the application or the application has been withdrawn by the property owner/applicant.

THIS IS TO CERTIFY THAT I, ON APRIL 23, 1985 SURVEYED THE PROP
ON THIS PLAT, AND THAT THE TITLE LINES AND THE WALLS OF THE BUILDING ARE AS SH
PLAT.

THE IMPROVEMENTS STAND STRICTLY WITHIN THE TITLE LINES AND THERE ARE NC
MENTS OR VISIBLE EASEMENTS, EXCEPT AS SHOWN.

SIGNED

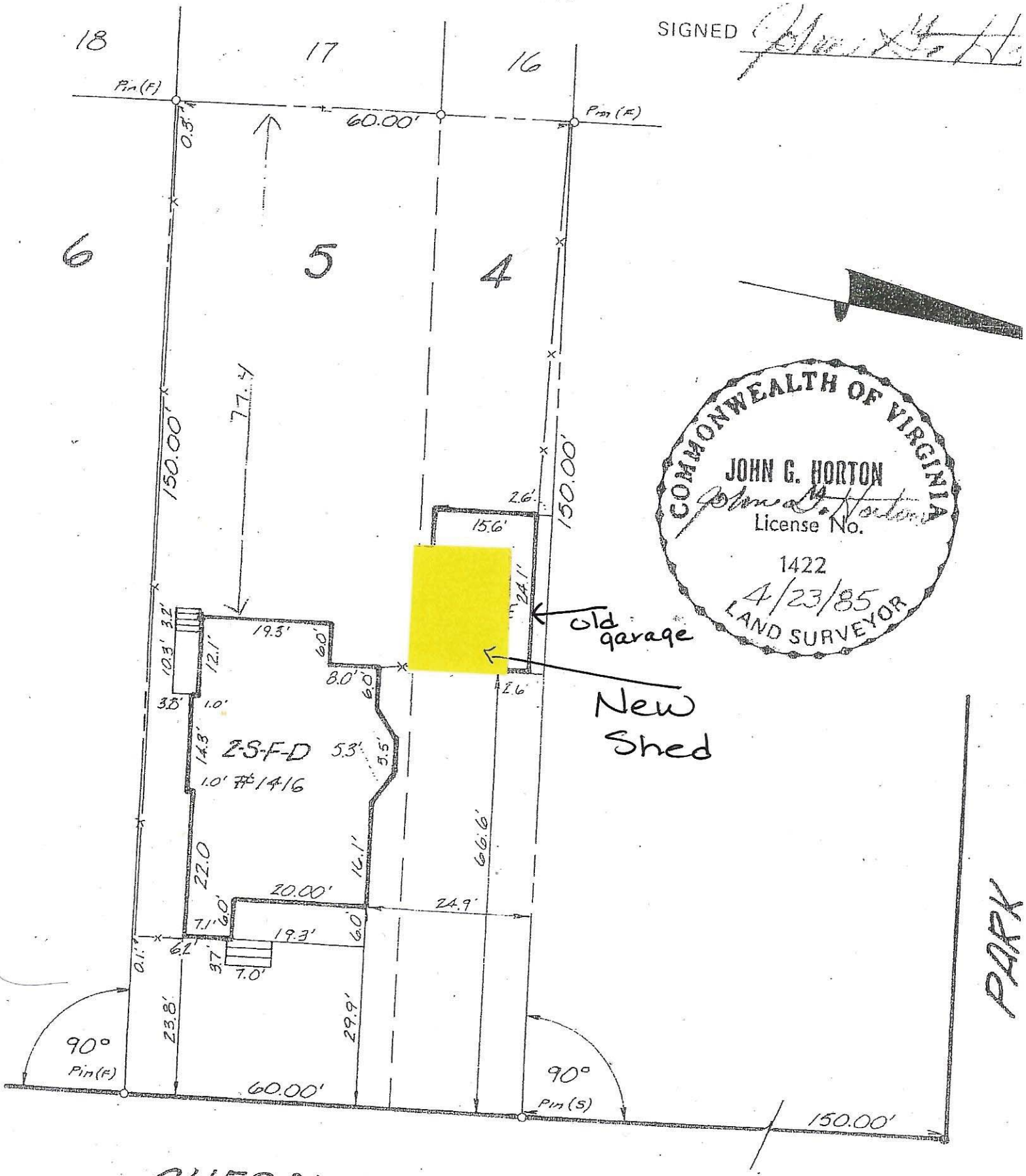

COMMONWEALTH OF VIRGINIA
JOHN G. HORTON
License No.
1422
4/23/85
LAND SURVEYOR

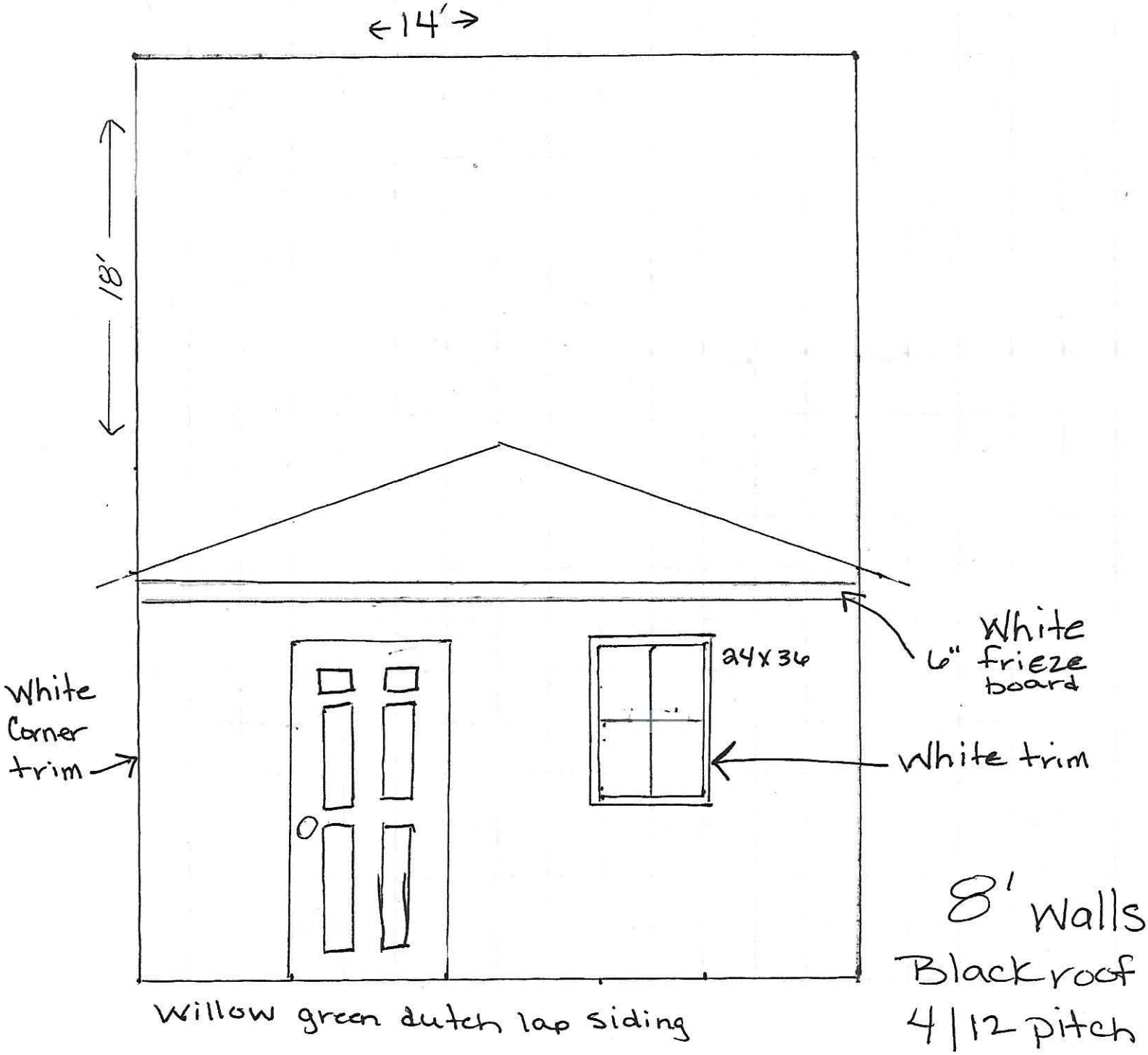

8' Walls
Black roof
4|12 pitch

Two over Two

Google

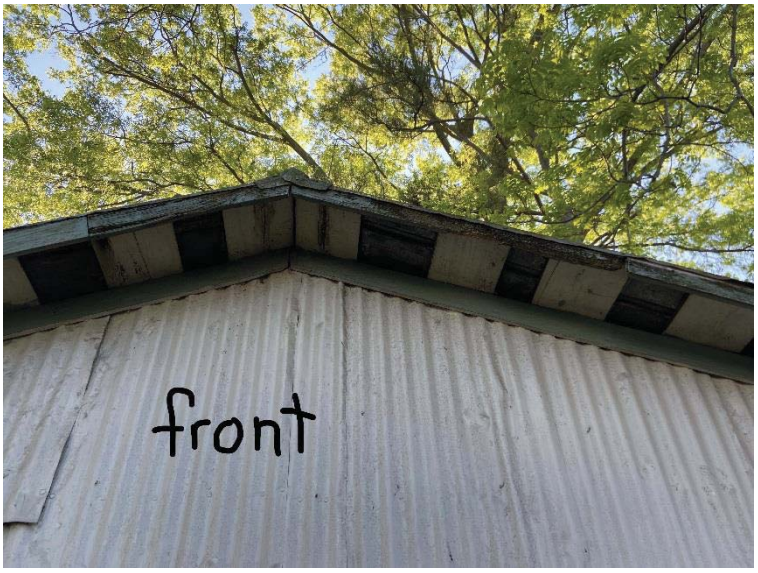
front

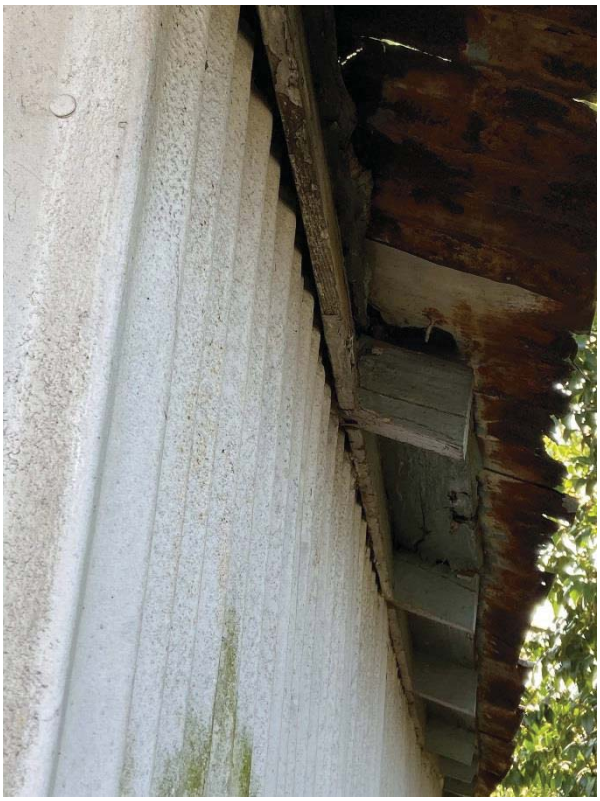

front

Left

Left

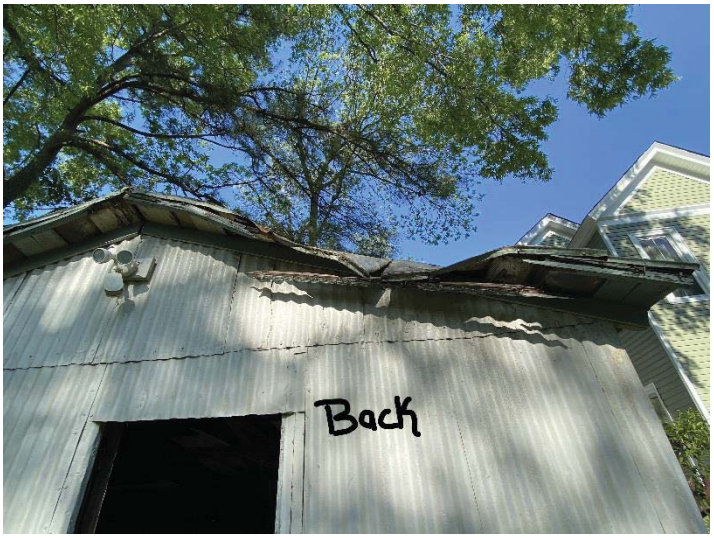
Back

Back

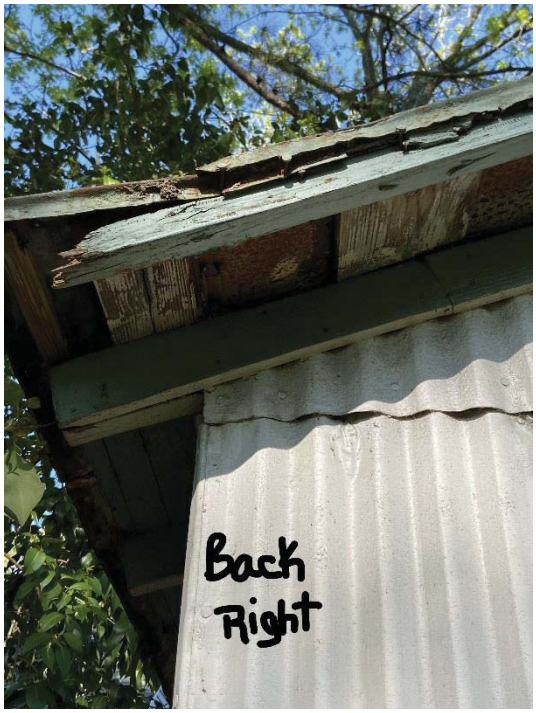
Back
Right

Back
door

Back door - I
can't close it :(

Right side

Right side

Right side

1125 Seaboard Avenue

City of Chesapeake
Department of Planning

Record Summary for Certificate of Appropriateness

Record Detail Information

Record Type: Certificate of Appropriateness
Record Status: Open
File Date: April 27, 2020
Record Number: PLN-CAPP-2020-056
Expiration Date:
Description:
Installation of solar panels on existing residential roof.
Record Name: Martin, James - Solar Installation
Parent Record Number:

Address: 1125 SEABOARD AVE, CHESAPEAKE, VA 23324

Owner Information

Primary	Owner Name	Owner Address	Owner Phone
Yes	MARTIN JAMES R & JAYLENE B	1125 SEABOARD AVE, CHESAPEAKE, VA 23324 232	

Parcel Information

Parcel No:
1280000001620

Contact Information

Name	Organization Name	Contact Type	Phone
Justine Parham	Ion Developer LLC	Applicant	[redacted]

Address
4801 N University Ave #900, 4801 N University Ave #900, Provo, UT 84604

Application Specific Information

NATURE OF THE APPLICATION

Description	Installation of solar panels on existing residential roof.
Zoning Sign Off	No
Economic Hardship	No

PLANNING STAFF TO COMPLETE

Application After-the-Fact	-
After-the-Fact Fee Paid	-
Approved Administratively	-
Approving Planner	-
Approval Date	-
Certificate Number	-
See supplemental submittal requirements	-
Board Approved Certificate Number	-

I, _____, hereby grant permission for City Staff & members of the Historic Architectural Review Board to enter my site to view exterior areas related to theis Certificate of Appropriateness Application.	-
Structure Designation	-

GENERAL INFORMATION

Year Structure Built	1924
Is this an After-the-Fact application?	No
$250 After the Fact fee, if required.	UNCHECKED
One original delivered to the Planning Department OR a copy attached to the on-line application	UNCHECKED
One disk containing all photos OR photos attached to on-line application	UNCHECKED
☐ Completed and notarized power of attorney form if the applicant is not the property owner.	UNCHECKED

NEW CONSTRUCTION

Completed application form.	UNCHECKED
☐ Surveyed site plan (including proposed buildings, structure(s), parking, etc.).	UNCHECKED
Front and side elevations	UNCHECKED
Samples	UNCHECKED
Arrangement of proposed exterior lighting.	UNCHECKED
Photographs of the property and adjoining or opposite properties.	UNCHECKED

ADDITIONS TO EXIST. STRUCTURES

Completed application form.	UNCHECKED
Surveyed site plan or city tax map	UNCHECKED
Elevations	UNCHECKED
Photographs of the existing structure and property.	UNCHECKED
Samples, photos, and brochures	UNCHECKED
Arrangement of proposed exterior lighting.	UNCHECKED
☐ Proposed signs with appropriate detail as to character and location.	UNCHECKED

ALTERATIONS OR REPAIRS

Completed application form.	UNCHECKED
Written description of work to be performed	UNCHECKED
Photographs of the building/structure.	UNCHECKED
2 quotes each are required for the following:	UNCHECKED
Photos numerically keyed	UNCHECKED

RELOCATIONS

Completed application form	UNCHECKED
☐ Photographs of the building or structure to be relocated	UNCHECKED

and adjacent properties.

☐ Photographs of the premises to which the building or structure will be relocated.	UNCHECKED
☐ Written description of reasons for the relocation and the proposed use of the vacated property.	UNCHECKED

DEMOLITIONS

Completed application form	UNCHECKED
☐ Photographs of the building or structure to be demolished to illustrate its state of disrepair.	UNCHECKED
Written report on condition of building or structure.	UNCHECKED
Written description of work to be performed	UNCHECKED

METAL ROOFS

Explanation	UNCHECKED

SPECIAL POWER OF ATTORNEY

Special Power of Attorney attached	UNCHECKED

METAL ROOFS

Info required to replace metal roof with metal roof.	UNCHECKED
Picture	UNCHECKED
Specification Sheet	UNCHECKED
Roof color sample	UNCHECKED
Info required to replace metal roof with architectural shingles.	UNCHECKED
Quotes	UNCHECKED
Roof color sample (asphalt)	UNCHECKED

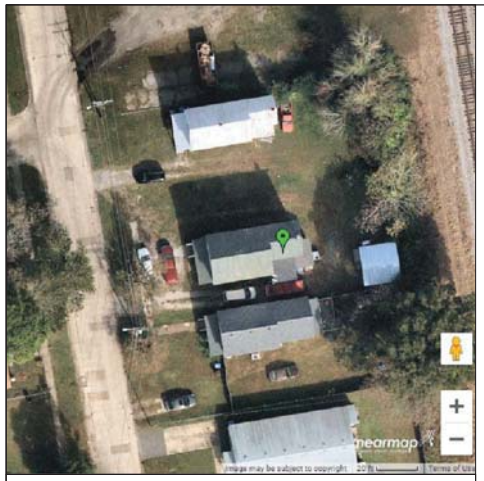

MAP OF LOCATION

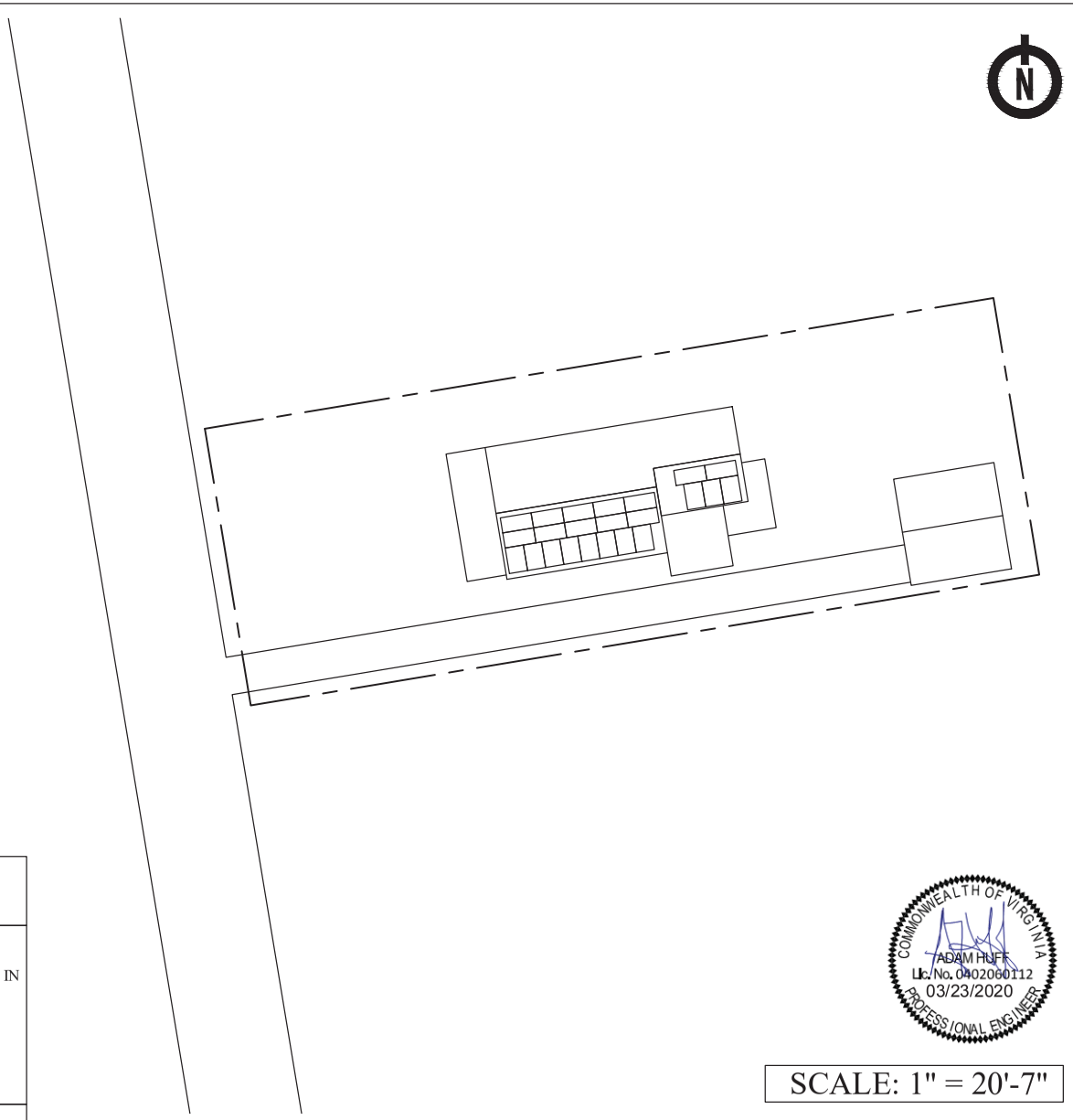

SCALE: 1" = 20'-7"

TOTAL AREA OF ROOF(S) USED: 497FT²
TOTAL AREA OF ARRAYS: 404.800000FT²
81.45%

SCOPE OF WORK:
THE SYSTEM CONSISTS OF A 7.36 KW DC (5.52 KW AC) ROOF-MOUNTED PHOTOVOLTAIC POWER SYSTEM OPERATING IN PARALLEL WITH THE UTILITY GRID. THERE ARE (23) SILFAB SOLAR SIL-320NL MODULES AND (23) ENPHASE IQ7-60-2-US MICRO-INVERTERS, MOUNTED ON THE BACK OF EACH PV MODULE, CONNECTING TO THE UTILITY GRID THROUGH THE EXISTING MAIN LOAD CENTER. ELECTRICAL MODIFICATIONS WILL BE MADE TO THE MAIN LOAD CENTER.

INTERCONNECTION METHOD: LOAD SIDE BREAKER

ROOF MATERIAL: COMPOSITE SHINGLE

PROJECT COMPLIES WITH 2014 NEC, 2015 IBC, 2015 IFC, 2015 IRC, 2015 VBC, 2015 VRC, AND APPLICABLE VIRGINIA UNIFORM STATEWIDE CONSTRUCTION CODES.

ALL CONDUIT WILL BE PAINTED TO MATCH THE EXISTING STRUCTURE.

AC DISCONNECT LOCATED NEXT TO OR WITHIN 10 FEET OF MAIN SERVICE PANEL(LINE OF SIGHT MAINTAINED).

COMMONWEALTH OF VIRGINIA
ADAM HUFF
Lic. No. 0402060112
03/23/2020
PROFESSIONAL ENGINEER

ION
4801 N UNIVERSITY AVE, #900
PROVO, UT 84604
(888) 781-7074

JAMES R MARTIN
1125 SEABOARD AVENUE
CHESAPEAKE, VA 23324

NABCEP CERTIFIED
PV Installation Professional
Douglas Daniels

LICENSED ELECTRICAL CONTRACTOR COMPANY:
ION DEVELOPER LLC,
DAVID CONRAD
CLASSIFICATION:
ELECTRICAL CONTRACTOR,
CLASS B & AES | TRADESMAN MELE
LICENSE NUMBER:
2705169798 | 2710069944
EXPIRATION:
11/30/2020 | 9/30/2020
AUTHORIZED CONTRACTOR:

SYSTEM SIZE: 7.36 kW DC
5.52 kW AC
23 MODULES

DATE: 3/18/2020

DRAWN BY: CSS

ADDITIONAL NOTES:

SHEET:
COVER
PV 1.0

PV CIRCUIT 1

PV CIRCUIT 2

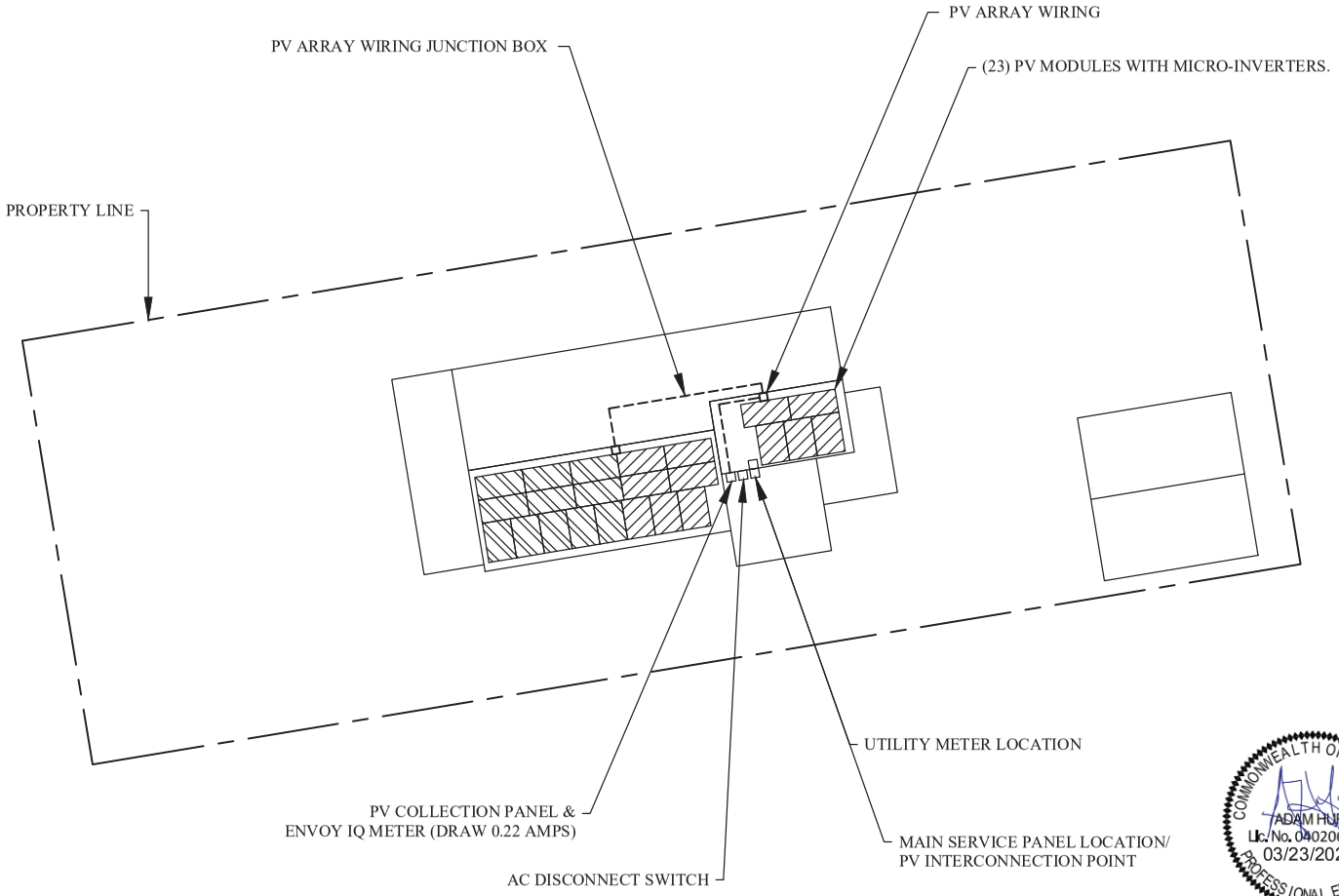

COMMONWEALTH OF VIRGINIA
ADAM HUFF
Lic. No. 0402060112
03/23/2020
PROFESSIONAL ENGINEER

SCALE:

1" = 14'-4"

ION

4801 N UNIVERSITY AVE, #900
PROVO, UT 84604
(888) 781-7074

JAMES R MARTIN
1125 SEABOARD AVENUE
CHESAPEAKE, VA 23324

NABCEP CERTIFIED PV Installation Professional
Douglas Daniels

LICENSED ELECTRICAL CONTRACTOR COMPANY:
ION DEVELOPER LLC,
DAVID CONRAD
CLASSIFICATION:
ELECTRICAL CONTRACTOR,
CLASS B & AES | TRADESMAN MELE
LICENSE NUMBER:
2705169798 | 2710069944
EXPIRATION:
11/30/2020 | 9/30/2020
AUTHORIZED CONTRACTOR:

SYSTEM SIZE: 7.36 kW DC
5.52 kW AC
23 MODULES

DATE: 3/18/2020

DRAWN BY: CSS

ADDITIONAL NOTES:

SHEET:
SITE PLAN
PV 2.0

ALL WIRING WILL BE PROPERLY SUPPORTED BY DEVICES OR MECHANICAL MEANS DESIGNED AND LISTED FOR SUCH USE AND WIRING WILL BE PERMANENTLY AND COMPLETELY HELD OFF OF THE ROOF SURFACE

ALL ARRAY SUPPORTS/MOUNTS SHALL BE STAGGERED FROM ONE ROW OF RACKING TO THE NEXT SUCH THAT NOT ALL SUPPORTS/MOUNTS DISTRIBUTE LOAD ONTO THE SAME TRUSSES

A

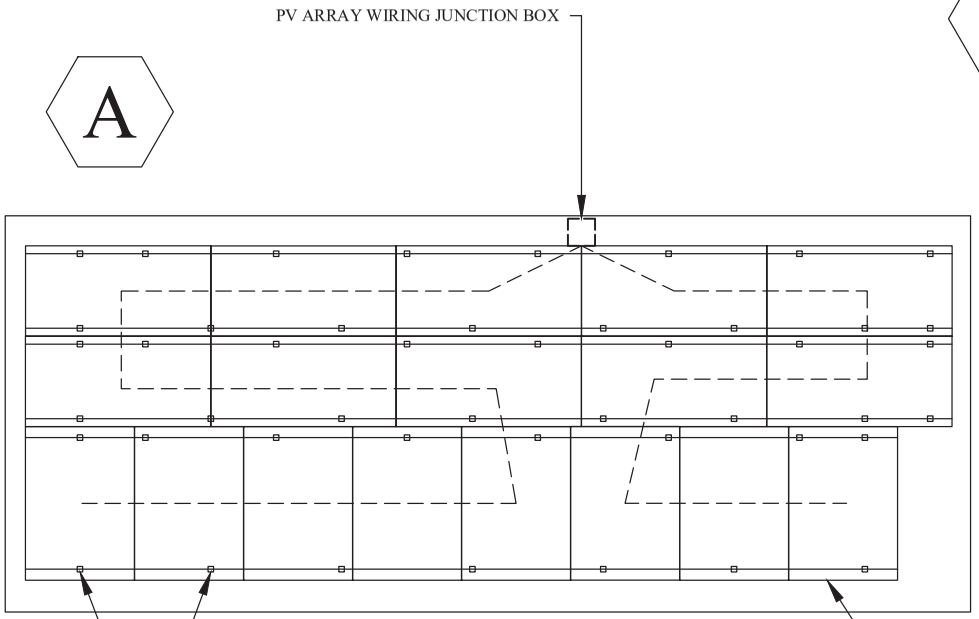

B

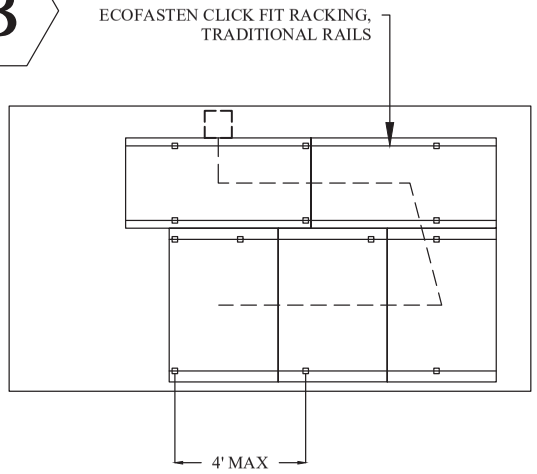

ROOF SECTION DATA

ROOF SECTION	A	B	C	D	E	F	G	H
MODULES	18	5						
TILT	24	24						
AZIMUTH	171	171						
SOLAR ACCESS AVG.	96.00%	92.00%						

SCALE:

1" = 3'-10"

COMMONWEALTH OF VIRGINIA
ADAM HUFF
Lic. No. 0402060112
03/23/2020
PROFESSIONAL ENGINEER

FIRE CODE OFFSET

ION

4801 N UNIVERSITY AVE, #900
PROVO, UT 84604
(888) 781-7074

JAMES R MARTIN
1125 SEABOARD AVENUE
CHESAPEAKE, VA 23324

NABCEP CERTIFIED PV Installation Professional
Douglas Daniels

LICENSED ELECTRICAL CONTRACTOR COMPANY:
ION DEVELOPER LLC,
DAVID CONRAD
CLASSIFICATION:
ELECTRICAL CONTRACTOR,
CLASS B & AES | TRADESMAN MELE
LICENSE NUMBER:
2705169798 | 2710069944
EXPIRATION:
11/30/2020 | 9/30/2020
AUTHORIZED CONTRACTOR:

SYSTEM SIZE: 7.36 kW DC
5.52 kW AC
23 MODULES

DATE: 3/18/2020

DRAWN BY: CSS

ADDITIONAL NOTES:

2" X 8" RAFTER SYSTEM 24" ON CENTER

CANTILEVERS WILL BE NO MORE THAN 24"

ATTACHMENT POINTS WILL BE NO MORE THAN 4' APART, STAGGERED

SHEET:

ROOF PLAN
PV 3.0

WEATHER DATA	
HIGH TEMP, 2% AVG.	34 °C
MIN DESIGN TEMP	-9 °C
GROUND SNOW LOAD	10 psf
WIND SPEED	117 mph

1. HIGH TEMPERATURE 2% AVERAGE BASED ON ASHRAE HIGHEST MONTH 2% DRY BULB TEMPERATURE FOR ASHRAE LOCATION MOST SIMILAR TO INSTALLATION LOCATION
2. MINIMUM DESIGN TEMPERATURE BASED ON ASHRAE MINIMUM MEAN EXTREME DRY BULB TEMPERATURE FOR ASHRAE LOCATION MOST SIMILAR TO INSTALLATION LOCATION
3. ALTERNATE POWER SOURCE PLACARD SHALL BE PERMANENTLY ATTACHED TO A/C DISCONNECT
4. ELECTRICAL INSTALL SHALL COMPLY WITH 2014 NATIONAL ELECTRICAL CODE
5. ALL SOLAR MODULES, EQUIPMENT, AND METALLIC COMPONENTS SHALL BE BONDED
6. IF THE EXISTING MAIN SERVICE DOES NOT HAVE VERIFIABLE GROUNDING ELECTRODE, IT IS THE PV CONTRACTOR'S RESPONSIBILITY TO INSTALL A SUPPLEMENTAL GROUNDING ELECTRODE
7. EACH MODULE SHALL BE GROUNDED PER MANUFACTURER INSTRUCTIONS AND APPROVED METHODS
8. PV INSTALLATION SHALL NOT OBSTRUCT ANY PLUMBING, MECHANICAL OR BUILDING ROOF VENTS
9. CONNECTORS THAT ARE NOT READILY ACCESSIBLE AND THAT ARE USED IN THE CIRCUITS OPERATING AT OR OVER 30V AC OR DC SHALL REQUIRE A TOOL FOR OPERATING AND ARE REQUIRED TO BE MARKED "DO NOT DISCONNECT UNDER LOAD" OR "NOT FOR CURRENT INTERRUPTING"
10. THIS SYSTEM IS IN FULL COMPLIANCE WITH 2014 NATIONAL ELECTRIC CODE AND STATE OF VIRGINIA AMENDMENTS FOR PHOTOVOLTAIC INSTALLATION, AND ARTICLE 690 OF THE NATIONAL ELECTRIC CODE (NEC NFPA 70)
11. BUILDING CONSTRUCTION TYPE: TYPE V
12. BUILDING OCCUPANCY TYPE: R3

ION
4801 N UNIVERSITY AVE, #900
PROVO, UT 84604
(888) 781-7074

JAMES R MARTIN
1125 SEABOARD AVENUE
CHESAPEAKE, VA 23324

NABCEP CERTIFIED
PV Installation Professional
Douglas Daniels

LICENSED ELECTRICAL CONTRACTOR COMPANY:
ION DEVELOPER LLC,
DAVID CONRAD
CLASSIFICATION:
ELECTRICAL CONTRACTOR,
CLASS B & AES | TRADESMAN MELE
LICENSE NUMBER:
2705169798 | 2710069944
EXPIRATION:
11/30/2020 | 9/30/2020
AUTHORIZED CONTRACTOR:

SYSTEM SIZE: 7.36 kW DC
5.52 kW AC
23 MODULES

DATE: 3/18/2020

DRAWN BY: CSS

ADDITIONAL NOTES:

SHEET:
LOCATION NOTES
PV 4.0

4.0 System Components

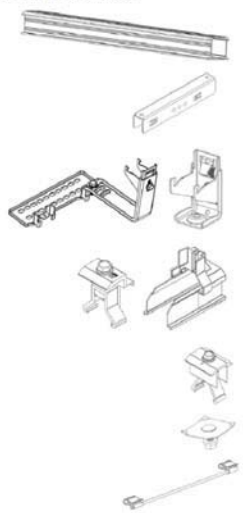

1) ClickFit Rail
   1500033 (2130mm)
   1500034 (3168mm)
   1500035 (4202mm)
2) Rail Splice
   1008081
3) CF Tile Hook and L foot
   1500005 - Tile Hook
   1500004 - L foot
4) CF End Clamp
   See Section 10
5) CF End Cap
   1510041 (Black)
   1510042 (Grey)
6) CF Mid Clamp
   See Section 10
7) MLPE Clip
8) Module Jumper
   1500028

6.2 Installing flashing and L feet

- ClickFit for comp shingle roofs uses EcoFasten Solar's GFI watertight flashing system
- Other roof types may use different EcoFasten Solar attachments, see www.EcoFastenSolar.com for more information.

Installation Steps:

1. Locate rafter lines from section 5.2.
2. Drill 1/4" pilot holes at all attachment points and back fill using roof-compatible sealant.
3. Separate shingles where flashing is to be installed. Insert the flashing so the top portion is under the next row of shingles North. Ensure the flashing is pushed far enough up-slope to prevent water infiltration through the vertical joints between shingles.
4. Align CFI flashing hole with pilot hole. Insert the lag bolt with pre-installed bonded washer through the L foot and EPDM grommet. Tighten the lag bolt until a ring of EPDM is visible around the circumference of the bonded washer.

Torque range is usually between 100-140 in-lb depending upon a number of factors. The EPDM ring visual indicator is the most effective way to ensure a watertight seal without damaging the system

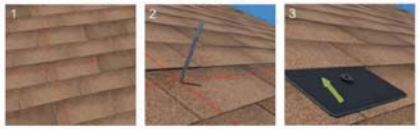

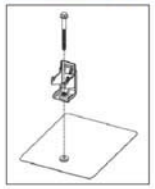

Note the orientation of the L foot and Clicker. The two Clicker "arms" should be facing downslope

REV DATE: 11/22/2019 | Draft 6 Release

6.3 Installing Tile Hooks

1. Locate rafters on the roof, mark the tiles to be removed. Hint: In some cases rafter tails are visible at the eaves of the roof, making it easy to find the rough location of the rafters. In other cases, the fascia board may have nail heads visible where it was attached to the rafters. In the worst-case a row of tiles may need to be moved to determine the rafter locations.
2. Slide the tile at the desired location upward to expose the roof sub surface. If the tile is to be notched, or if using a replacement flashing, remove it entirely. Clean the sub surface with a brush to remove any debris that could affect the sealing.
3. Locate the rafter center and mark it.
4. Place the tile hook with the hook itself in the valley of the next tile below. Drill one 1/4" pilot hole in the rafter center, taking care to keep the hook in the valley of the tile below. Backfill this hole with a roof- compatible sealant. For flat tiles, try to avoid having the hook land directly under a joint between tiles, this will create a larger gap or more notching than necessary.
5. Install one 5/16" x 4" lag screw on the row of holes closest to the tile hook arm. If possible, install the screw in one of the three holes directly next to the arm. If the lag screw must be installed in one of the seven holes furthest from the arm (denoted by the red rectangle below), install three deck screws in the pattern shown by the green circles below.
6. Adjust the height of the tile hook as necessary using the bolt shown in the fourth image.
7. Flash the surrounding area and lag screw head with roof-compatible sealant as necessary.
8. Replace the tile that was moved and/or removed, or install the tile replacement flashing. If it is to be notched, mark the tile for notching. Notching can be done with a grinding wheel or by using a chisel.

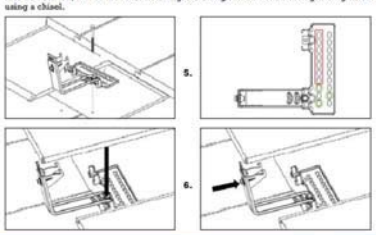

REV DATE: 11/22/2019 | Draft 6 Release

6.4 Installing the Rail

1. Place the rail in the Clickers.
2. Ensure the rails extend a minimum of 2" past the last attachments in each row and that each rail is aligned with the next row North and/or South.
3. Roll the rail into each Clicker, an audible "click" should be heard. If attachments are extremely misaligned it may be necessary to loosen the leveling bolt, snap the Clicker onto the rail, then re-tighten the leveling bolt.
4. Level the rail if necessary by loosening the bolt attaching the Clicker to the L-foot or tile hook.

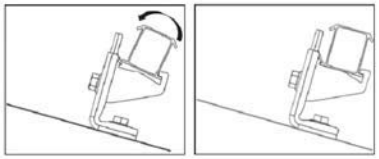

Ensure the tab on the Clicker is aligned with the rail edge as shown below

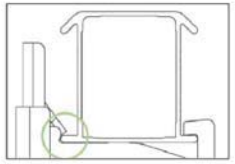

REV DATE: 11/22/2019 | Draft 6 Release

8.0 System Specifications

Max Modules Per Ground Lug	300
Max Cantilever	1/3 of allowable Bracket Spacing
Fire Rating - Tile	Type 1 on Non-Combustible Roof Surfaces
Fire Rating	Type 1
Max System Voltage	1000VDC
Ground Wire Specs	TBD by Engineer of Record
Max Downforce/Uplift	TBD by Engineer of Record
Warranty	20 Year Material and Workmanship
UL Marketing	System Markerings Per-Install on all End-Caps
Roof Pitch	10-60 Degrees

UL Mark Example:

ECOFASTEN CF
MMYY-X UL 2703 PTL
TU 721990011.01

(-X denotes manufacturer ID)

Torque Specifications

Component	Torque (in-lb)	Notes
Lag Screw	120-140	Changes depending on roof/moisture/etc. Use visual indicator of the black EPDM ring around the bonded washer for torquing.
Mid-Clamp	144	
End-Clamp	144	
Rail Clicker Leveling Bolt	80	Pre-torqued upon delivery. Applies to Tile Hook and L-Foot/Clicker
Hook Height Bolt	N/A	Lightly clamp hook to flush with top of next tile row
Ground lug	N/A	Refer to specific ground lug manufacturer's installation manual

EcoFasten
An ESDEC Company

CLICKFIT

END CLAMPS/CAPS & MID CLAMPS

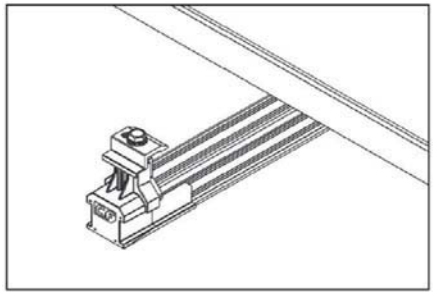

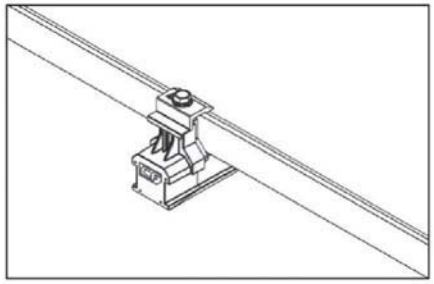

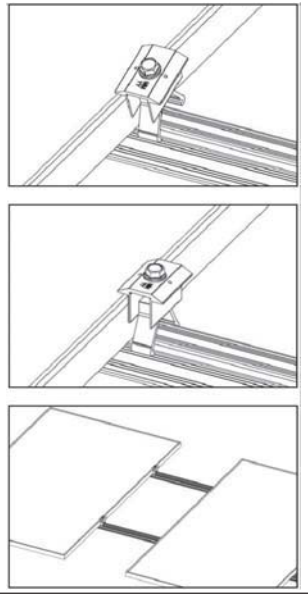

7.0 Bonding and Grounding

7.1 Bonding Paths

All bond paths are carried either module-to-module through the mid clamp, or module-to- module through the module jumper shown below (bond paths shown in green):

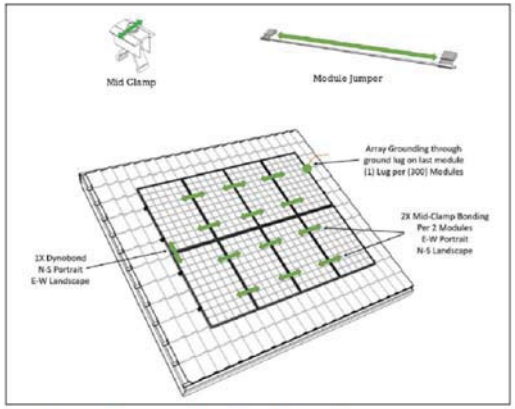

Mid clamps are multi-use,however, if a mid-clamp is removed after tightening, ensure that the grounding pins bite into "new metal" to ensure proper bonding

ION

4801 N UNIVERSITY AVE, #900
PROVO, UT 84604
(888) 781-7074

JAMES R MARTIN
1125 SEABOARD AVENUE
CHESAPEAKE, VA 23324

COMMONWEALTH OF VIRGINIA
ADAM HUFF
Lic. No. 0402060112
03/23/2020
PROFESSIONAL ENGINEER

NABCEP CERTIFIED
PV Installation Professional
Douglas Daniels

LICENSED ELECTRICAL CONTRACTOR COMPANY:
ION DEVELOPER LLC,
DAVID CONRAD
CLASSIFICATION:
ELECTRICAL CONTRACTOR,
CLASS B & AES | TRADESMAN MELE
LICENSE NUMBER:
2705169798 | 2710069944
EXPIRATION:
11/30/2020 | 9/30/2020
AUTHORIZED CONTRACTOR:

SYSTEM SIZE: 7.36 kW DC
5.52 kW AC
23 MODULES

DATE: 3/18/2020

DRAWN BY: CSS

ADDITIONAL NOTES:

5/16" X 4" LAG BOLTS,
MIN. EMBEDMENT 2 1/2"

SHEET:
MOUNTING
PV 5.0

THIS PV SYSTEM WILL HAVE THE FOLLOWING MARKINGS:

1 -- MATERIALS USED FOR MARKINGS WILL BE WEATHER RESISTANT. THE UNDERWRITERS LABORATORIES MARKING AND LABELING SYSTEM 969 (UL969) WILL BE USED AS STANDARD TO DETERMINE WEATHER RATING.

2 -- MARKING STATING “CAUTION: SOLAR ELECTRIC SYSTEM CONNECTED” WILL BE PLACED AT THE MAIN SERVICE DISCONNECT.

3 -- MARKING STATING “WARNING: PHOTOVOLTAIC POWER SOURCE” WILL BE PLACED ALONG DIRECT CURRENT CONDUIT, RACEWAYS, ENCLOSURES, CABLE ASSEMBLIES, AND JUNCTION BOXES.

4 -- THE MARKING WILL BE MADE TO THE FOLLOWING SPECIFICATIONS:

- RED BACKGROUND
- WHITE LETTERING
- MINIMUM 3/8” LETTER HEIGHT
- ALL CAPITAL LETTERS
- ARIAL OR SIMILAR FONT, NON-BOLD
- REFLECTIVE, WEATHER RESISTANT MATERIAL SUITABLE FOR THE ENVIRONMENT (DURABLE ADHESIVE MATERIALS MAY MEET THIS REQUIREMENT)

5 -- MARKING WILL BE PLACED ON ALL INTERIOR AND EXTERIOR CONDUIT, RACEWAYS, ENCLOSURES, CABLE ASSEMBLIES, AND JUNCTION BOXES TO ALERT THE FIRE SERVICE TO AVOID CUTTING THEM. MARKINGS WILL BE PLACED ON ALL EXTERIOR DC CONDUIT, RACEWAYS, ENCLOSURES, AND CABLE ASSEMBLIES EVERY 10 FEET, AT TURNS AND ABOVE AND/OR BELOW PENETRATIONS AND ALL DC COMBINER AND JUNCTION BOXES.

ION
4801 N UNIVERSITY AVE, #900
PROVO, UT 84604
(888) 781-7074

JAMES R MARTIN
1125 SEABOARD AVENUE
CHESAPEAKE, VA 23324

NABCEP CERTIFIED
PV Installation Professional
Douglas Daniels

LICENSED ELECTRICAL CONTRACTOR COMPANY:
ION DEVELOPER LLC,
DAVID CONRAD
CLASSIFICATION:
ELECTRICAL CONTRACTOR,
CLASS B & AES | TRADESMAN MELE
LICENSE NUMBER:
2705169798 | 2710069944
EXPIRATION:
11/30/2020 | 9/30/2020
AUTHORIZED CONTRACTOR:

SYSTEM SIZE: 7.36 kW DC
5.52 kW AC
23 MODULES

DATE: 3/18/2020

DRAWN BY: CSS

ADDITIONAL NOTES:

SHEET:
SYSTEM MARKINGS
PV 6.0

NEXT TO ALL SOLAR BREAKERS
(DIFFERENT STYLES TO MEET LOCAL CODES)

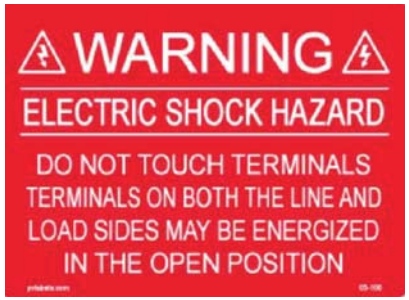

NEC 690.17 (4)
SERVICE PANEL - AC DISCONNECT - SUB PANEL

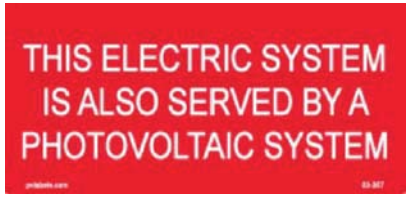

LOCAL CODES
MAIN SERVICE PANEL AND METER

PANEL WITH SOLAR BACKFED BREAKER

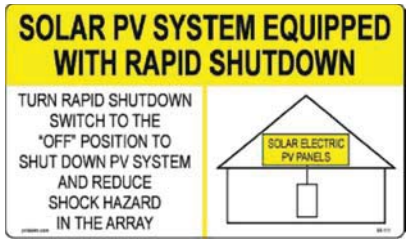

NEC 690.56(C)(1)(A)

LABEL PLACED FOR PV SYSTEMS THAT SHUT DOWN THE ARRAY AND CONDUCTORS LEAVING THE ARRAY LEVEL (AFTER THE MICRO-INVERTER OUTPUT TERMINALS)

LOCATED NO MORE THAN 3 FT. AWAY FROM THE SERVICE DISCONNECTING MEANS TO WHICH THE PV SYSTEMS ARE CONNECTED AND AT ALL IDENTIFIED RAPID SHUTDOWN SWITCHES IF NOT IN THE SAME LOCATION

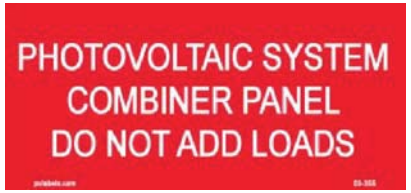

COMBINER PANEL OR SOLAR LOAD CENTER

AC DISCONNECT

SOLAR REC METER

NEC 690.64 & NEC 705.12 (D)(4)
SERVICE PANEL

NEC 690.54
AC DISCONNECT

ION
4801 N UNIVERSITY AVE, #900
PROVO, UT 84604
(888) 781-7074

JAMES R MARTIN
1125 SEABOARD AVENUE
CHESAPEAKE, VA 23324

NABCEP CERTIFIED
PV Installation Professional
Douglas Daniels

LICENSED ELECTRICAL CONTRACTOR COMPANY:
ION DEVELOPER LLC,
DAVID CONRAD
CLASSIFICATION:
ELECTRICAL CONTRACTOR,
CLASS B & AES | TRADESMAN MELE
LICENSE NUMBER:
2705169798 | 2710069944
EXPIRATION:
11/30/2020 | 9/30/2020
AUTHORIZED CONTRACTOR:

SYSTEM SIZE: 7.36 kW DC
5.52 kW AC
23 MODULES

DATE: 3/18/2020

DRAWN BY: CSS

ADDITIONAL NOTES:

SHEET:
LABELS & SIGNAGE
PV 7.0

PANELS WILL BE INSTALLED PARALLEL TO THE ROOF TILT.
COMBINED HEIGHT OF SOLAR ARRAY AND HOME WILL NOT EXCEED 26 FEET IN TOTAL HEIGHT

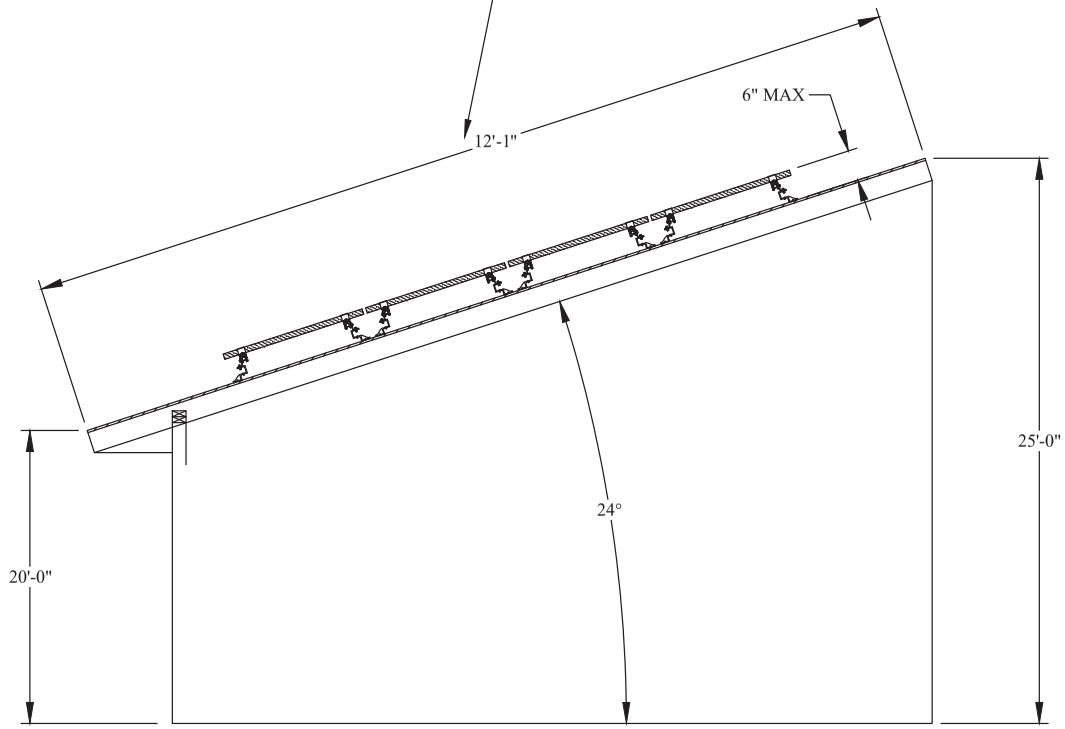

COMMONWEALTH OF VIRGINIA
ADAM HUFF
Lic. No. 0402060112
03/23/2020
PROFESSIONAL ENGINEER

ION
4801 N UNIVERSITY AVE, #900
PROVO, UT 84604
(888) 781-7074

JAMES R MARTIN
1125 SEABOARD AVENUE
CHESAPEAKE, VA 23324

NABCEP CERTIFIED
PV Installation Professional
Douglas Daniels

LICENSED ELECTRICAL CONTRACTOR COMPANY:
ION DEVELOPER LLC,
DAVID CONRAD
CLASSIFICATION:
ELECTRICAL CONTRACTOR,
CLASS B & AES | TRADESMAN MELE
LICENSE NUMBER:
2705169798 | 2710069944
EXPIRATION:
11/30/2020 | 9/30/2020
AUTHORIZED CONTRACTOR:

SYSTEM SIZE: 7.36 kW DC
5.52 kW AC
23 MODULES

DATE: 3/18/2020

DRAWN BY: CSS

ADDITIONAL NOTES:

SHEET:
ELEVATION VIEW
PV 8.0

FOR THE PROPOSED PV ELECTRICAL INSTALLATION, TYPE NM-CABLE SHALL ONLY BE USED WHEN RUNNING ELECTRICAL WIRING THROUGH THE ATTIC SPACE OR INTERIOR OF THE PERMITTED STRUCTURE.

INSTALLATION OF TYPE NM-CABLE SHALL COMPLY WITH NEC 334.10 AND NEC 334.12.

PV MODULE SPECIFICATIONS		
MODULE MAKE AND MODEL	SILFAB SIL 320NL	
MAXIMUM POWER (DC)	320	WATTS
MAX POWER-POINT VOLTAGE (VMPP)	32.9	VOLTS
MAX POWER-POINT CURRENT (IMPP)	9.74	AMPS
OPEN CIRCUIT VOLTAGE (VOC)	40.1	VOLTS
SHORT CIRCUIT CURRENT (ISC)	10.32	AMPS
TEMPERATURE COEFFICIENT VOC	-0.28	%/°C
MAXIMUM SYSTEM VOLTAGE	1000V DC (UL)	

MICRO-INVERTER SPECIFICATIONS		
INVERTER MAKE AND MODEL	ENPHASE IQ7-60-2-US	
RATED OUTPUT POWER (AC)	240	WATTS
NOMINAL OUTPUT VOLTAGE (AC)	240	VOLTS
MAX OUTPUT CURRENT (AC)	1	AMPS
MAX INPUT VOLTAGE (DC)	48	VOLTS
MAX INPUT CURRENT (DC)	15	AMPS
MAX OCPD RATING (AC)	20	AMPS
MAX NUMBER OF PANELS PER CIRCUIT	16	

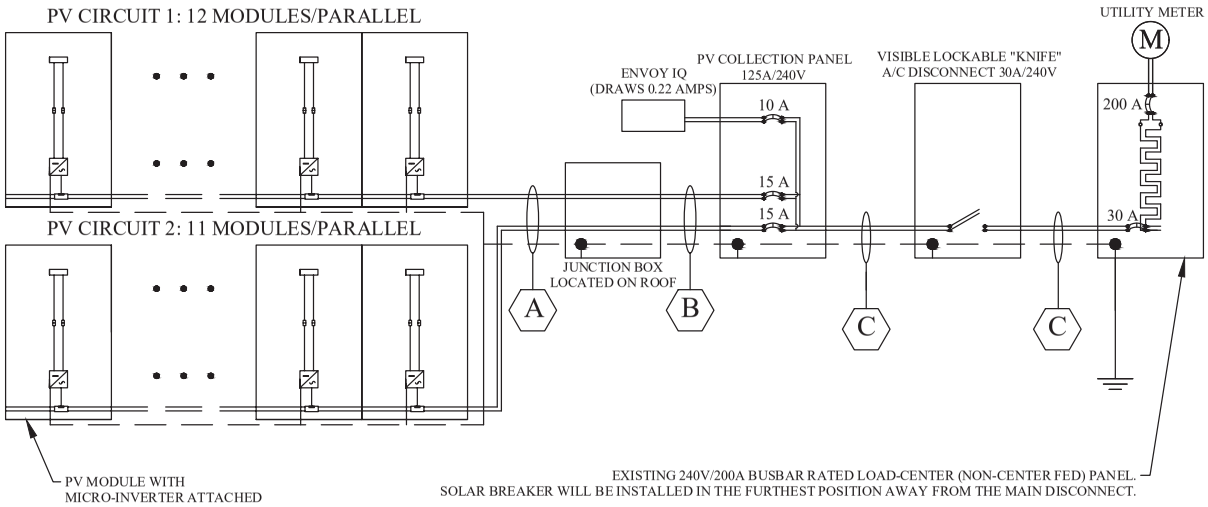

AC PHOTOVOLTAIC SYSTEM RATINGS		
MAX AC OPERATING CURRENT	23	AMPS
MAX AC OPERATING VOLTAGE	240	VOLTS

*TYPE NM-B CABLE WILL BE RAN THROUGH THE ATTIC SPACE/INTERIOR WHERE POSSIBLE

RACEWAY AND CONDUCTOR SCHEDULE

TAG	CONDUCTOR TYPE	MINIMUM WIRE SIZE	# OF CONDUCTORS	RACEWAY / CABLE TYPE	MINIMUM CONDUIT SIZE
A	ENPHASE Q-CABLE (USE-2)	12	2	USE-2 / FREE AIR	FREE AIR
	BARE COPPER (EGC)	6	1	BARE / FREE AIR	
B	THWN-2 OR NM-B CABLE *	10	4	EMT OR NM-B CABLE	3/4"
	THWN-2 OR NM-B CABLE (EGC) *	10	1		
C	THWN-2	10	3	EMT	3/4"
	THWN-2 (EGC)	10	1		

ION
4801 N UNIVERSITY AVE, #900
PROVO, UT 84604
(888) 781-7074

JAMES R MARTIN
1125 SEABOARD AVENUE
CHESAPEAKE, VA 23324

NABCEP CERTIFIED PV Installation Professional
Douglas Daniels

LICENSED ELECTRICAL CONTRACTOR COMPANY:
ION DEVELOPER LLC,
DAVID CONRAD
CLASSIFICATION:
ELECTRICAL CONTRACTOR,
CLASS B & AES | TRADESMAN MELE
LICENSE NUMBER:
2705169798 | 2710069944
EXPIRATION:
11/30/2020 | 9/30/2020
AUTHORIZED CONTRACTOR:

SYSTEM SIZE: 7.36 kW DC
5.52 kW AC
23 MODULES

DATE: 3/18/2020

DRAWN BY: CSS

ADDITIONAL NOTES:

SHEET:
1-LINE
EL 1.0

1. THE ENPHASE IQ6, IQ7, M250, M215 (M215-60-2LL-SXX-IG), AND C250 FOURTH GENERATION MICROINVERTERS MEET THE REQUIREMENTS OF THE NATIONAL ELECTRICAL CODE ARTICLE 690.35 FOR UNGROUNDED PHOTOVOLTAIC POWER SYSTEMS. NEC 690.35 ALLOWS FOR PHOTOVOLTAIC POWER SYSTEMS TO BE INSTALLED WITH UNGROUNDED PHOTOVOLTAIC SOURCE AND OUTPUT CIRCUITS. SYSTEMS THAT MEET THE REQUIREMENTS OF NEC 690.35 ARE EXEMPT FROM THE SYSTEM GROUNDING REQUIREMENTS OF NEC 690.41 SYSTEM GROUNDING.
2. NEC ARTICLE 690.43 EQUIPMENT GROUNDING SPECIFIES THAT ALL EXPOSED NON-CURRENT-CARRYING METAL PARTS OF PV MODULE FRAMES, ELECTRICAL EQUIPMENT, AND CONDUCTOR ENCLOSURES SHALL BE PROVIDED WITH EQUIPMENT GROUNDING. 690.43(C) STRUCTURE AS EQUIPMENT GROUNDING CONDUCTOR ALLOWS FOR EQUIPMENT TO BE USED AS THE EQUIPMENT GROUNDING CONDUCTOR IN A PHOTOVOLTAIC SYSTEM. SPECIFICALLY, "DEVICES LISTED AND IDENTIFIED FOR GROUNDING THE METALLIC FRAMES OF PV MODULES OR OTHER EQUIPMENT SHALL BE PERMITTED TO BOND THE EXPOSED METAL SURFACES OR OTHER EQUIPMENT TO MOUNTING SURFACES." THE DEVICES LISTED AND IDENTIFIED FOR GROUNDING THE EQUIPMENT MAY BE STAND-ALONE GROUNDING COMPONENTS OR UL-2703 LISTED MOUNTING HARDWARE. IN AN ENPHASE MICROINVERTER SYSTEM, IF THE MICROINVERTERS AND MODULES ARE BONDED TO THE RACKING ASSEMBLIES WITH THE USE OF LISTED AND APPROVED GROUNDING CLIPS OR GROUNDING COMPONENTS, THE EQUIPMENT GROUNDING CONDUCTOR PROVIDED TO THE MICROINVERTERS THROUGH THE ENPHASE ENGAGE CABLE MAY ALSO BE USED TO GROUND THE OTHER PHOTOVOLTAIC SYSTEM COMPONENTS.

ION
4801 N UNIVERSITY AVE, #900
PROVO, UT 84604
(888) 781-7074

JAMES R MARTIN
1125 SEABOARD AVENUE
CHESAPEAKE, VA 23324

NABCEP CERTIFIED
PV Installation Professional
Douglas Daniels
NABCEP Certified Professional
PPV-032026-012293

LICENSED ELECTRICAL CONTRACTOR COMPANY:
ION DEVELOPER LLC,
DAVID CONRAD
CLASSIFICATION:
ELECTRICAL CONTRACTOR,
CLASS B & AES | TRADESMAN MELE
LICENSE NUMBER:
2705169798 | 2710069944
EXPIRATION:
11/30/2020 | 9/30/2020
AUTHORIZED CONTRACTOR:

SYSTEM SIZE: 7.36 kW DC
5.52 kW AC
23 MODULES

DATE: 3/18/2020

DRAWN BY: CSS

ADDITIONAL NOTES:

SHEET:
ELECTRICAL NOTES
EL 2.0

ELECTRICAL PHOTOS

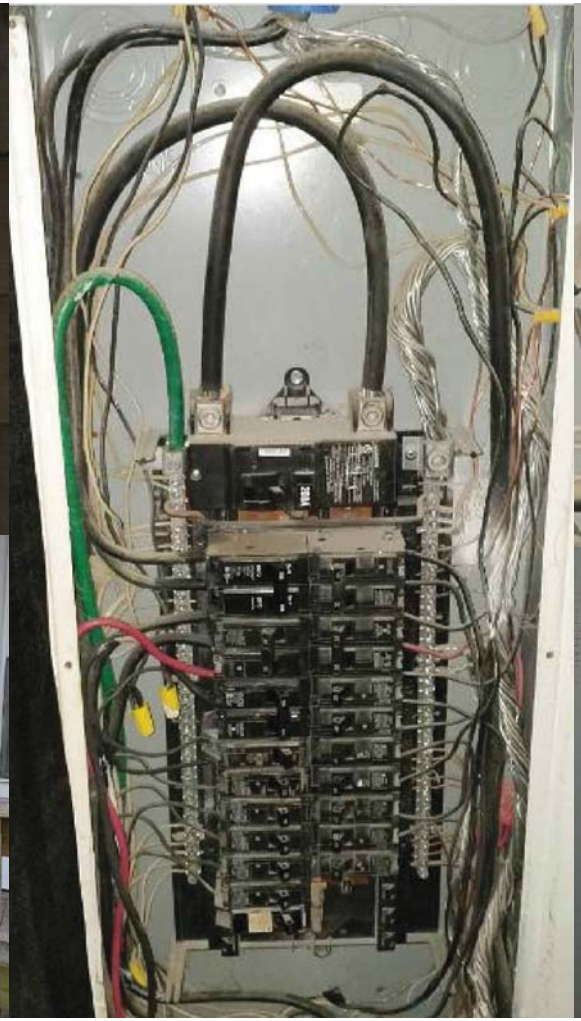

ION
4801 N UNIVERSITY AVE, #900
PROVO, UT 84604
(888) 781-7074

JAMES R MARTIN
1125 SEABOARD AVENUE
CHESAPEAKE, VA 23324

NABCEP CERTIFIED
PV Installation Professional
Douglas Daniels

LICENSED ELECTRICAL CONTRACTOR COMPANY:
ION DEVELOPER LLC,
DAVID CONRAD
CLASSIFICATION:
ELECTRICAL CONTRACTOR,
CLASS B & AES | TRADESMAN MELE
LICENSE NUMBER:
2705169798 | 2710069944
EXPIRATION:
11/30/2020 | 9/30/2020
AUTHORIZED CONTRACTOR:

SYSTEM SIZE: 7.36 kW DC
5.52 kW AC
23 MODULES

DATE: 3/18/2020

DRAWN BY: CSS

ADDITIONAL NOTES:

SHEET:
ELECTRICAL PHOTOS
EL 3.0

SIL-320 NL

60 Cell

Monocrystalline PV Module

INDUSTRY LEADING WARRANTY
All our products include an industry leading 25-year product workmanship and 30-year performance warranty.

35+ YEARS OF SOLAR INNOVATION
Leveraging over 35+ years of worldwide experience in the solar industry, Silfab is dedicated to superior manufacturing processes and innovations such as Bifacial and Back Contact technologies, to ensure our partners have the latest in solar innovation.

NORTH AMERICAN QUALITY
Silfab is the leading automated solar module manufacturer in North America. Utilizing premium quality materials and strict quality control management to deliver the highest efficiency, premium quality PV modules 100% made in North America.

CHUBB
* Chubb provides error and omission insurance to Silfab Solar Inc.

BAA / ARRA COMPLIANT
Silfab panels are designed and manufactured to meet Buy American Act Compliance. The US State Department, US Military and FAA have all utilized Silfab panels in their solar installations.

LIGHT AND DURABLE
Engineered to accommodate low load bearing structures up to 5400Pa. The light-weight frame is exclusively designed for wide-ranging racking compatibility and durability.

LOWEST DEFECT RATE
Total automation ensures strict quality controls during the entire manufacturing process at our ISO certified facilities. 48.18 ppm as per December 2018.

DOMESTIC PRODUCTION
Silfab Solar manufactures our PV modules in two automated locations within North America. Our 300+ North American team is ready to help our partners win the hearts and minds of customers, providing customer service and product delivery that is direct, efficient and local.

AESTHETICALLY PLEASING
All black sleek design, ideal for high-profile residential or commercial applications.

PID RESISTANT
PID Resistant due to advanced cell technology and material selection. In accordance to IEC 62804-1.

Electrical Specifications		SIL-320 NL mono PERC	
Test Conditions		STC	NOCT
Module Power (Pmax)	Wp	320	242
Maximum power voltage (Vpmax)	V	32.88	29.59
Maximum power current (Ipmax)	A	9.74	8.1
Open circuit voltage (Voc)	V	40.10	37.09
Short circuit current (Isc)	A	10.32	8.46
Module efficiency	%	18.8	17.8
Maximum system voltage (VDC)	V	1000	
Series fuse rating	A	20	
Power Tolerance	Wp	0 to +10	

Measurement conditions: STC 1000 W/m2 • AM 1.5 • Temperature 25 °C • NOCT 800 W/m² • AM 1.5 • Measurement uncertainty ≤ 3%
• Sun simulator calibration reference modules from Fraunhofer Institute. Electrical characteristics may vary by ±5% and power by 0 to +10W.

Temperature Ratings	SIL-320 NL mono PERC
Temperature Coefficient Isc	0.064 %/°C
Temperature Coefficient Voc	-0.28 %/°C
Temperature Coefficient Pmax	-0.36 %/°C
NOCT (± 2°C)	45 °C
Operating temperature	-40/+85 °C

Mechanical Properties and Components	SIL-320 NL mono PERC	
	Metric	Imperial
Module weight	18.6 kg ±0.2 kg	41 ±0.4 lbs
Dimensions (H x L x D)	1700 mm x 1000 mm x 38 mm	66.9 in x 39.4 in x 1.5 in
Maximum surface load (wind/snow)*	4000 Pa rear load / 5400 Pa front load N/m²	83.5/112.8 lb/ft^2
Hail impact resistance	ø 25 mm at 83 km/h	ø 1 in @ 51.6 mph
Cells	60 - Si mono PERC - 5 busbar 158.75 x 158.75 mm	60 - Si mono PERC - 5 busbar 6.25 x 6.25 Inch
Glass	3.2 mm high transmittance, tempered, DSM anti-reflective coating	0.126 high transmittance, tempered, DSM anti-reflective coating
Cables and connectors (refer to installation manual)	1200 mm, ø 5.7 mm, MC4 compatible	47.2 in, ø 0.22 in, MC4 compatible
Backsheet	High durability, superior hydrolysis resistance, multi-layer dielectric film	
Frame	Anodized Aluminum (Black)	
Bypass diodes	3 diodes-30SQ045T (45V max DC blocking voltage, 30A max forward rectified current)	
Junction Box	UL 3730 Certified, IP67 rated	

Warranties	SIL-320 NL mono PERC			
Module product workmanship warranty	25 years**			
Linear power performance guarantee	30 years			
	≥ 97% end 1st year	≥ 90% end 12th year	≥ 82% end 25th year	≥ 80% end 30th year

Certifications	SIL-320 NL mono PERC
Product	ULC ORD C1703, UL 1703, CEC listed, IEC 62716 Ammonia Corrosion; IEC61701:2011 Salt Mist Corrosion Certifed, UL Fire Rating: Type 2
Factory	ISO9001:2015

- Modules Per Pallet: 26
- Pallets Per Truck: 36
- Modules Per Truck: 936

*⚠ Warning. Read the Safety and Installation Manual for mounting specifications and before handling, installing and operating modules.

**12 year extendable to 25 years subject to registration and conditions outlined under "Warranty" at www.silfabsolar.com.

Third-party generated pan files from Fraunhofer-Institute for Solar Energy Systems ISE are available for download at: www.silfabsolar.com/downloads

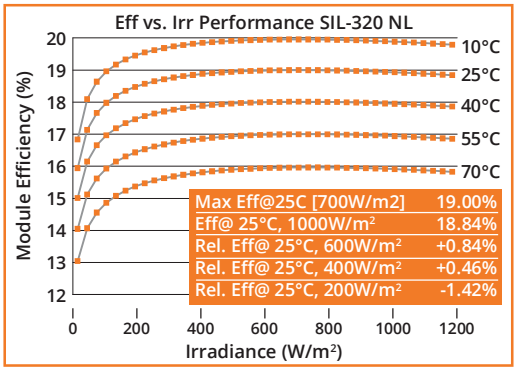

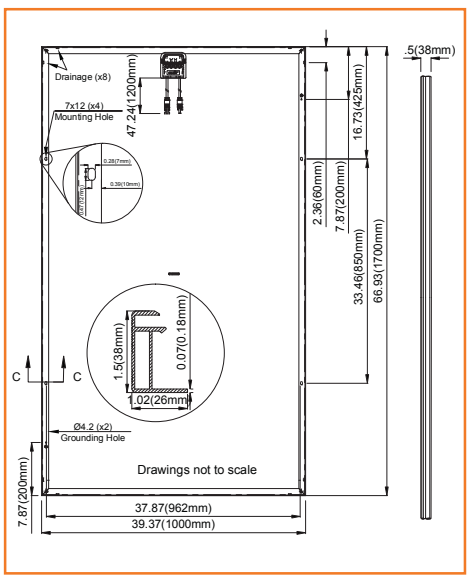

Silfab Solar Inc.
240 Courtneypark Drive East
Mississauga ON L5T 2Y3 Canada
Tel +1 905-255-2 Fax +1 905-696-0267
info@silfabsolar.com | www.silfabsolar.com

Silfab Solar Inc.
800 Cornwall Ave
Bellingham WA 98225 USA
Tel +1 360-569-4733

2019 TOP PERFORMER PVEL | DNV·GL PV MODULE RELIABILITY SCORECARD

Silfab-SIL-320-NL-20200102 • No reproduction of any kind is allowed. Data and information is subject to modifications without notice. ©Silfab, 2020.

Enphase IQ 7 and IQ 7+ Microinverters

The high-powered smart grid-ready **Enphase IQ 7 Micro**™ and **Enphase IQ 7+ Micro**™ dramatically simplify the installation process while achieving the highest system efficiency.

Part of the Enphase IQ System, the IQ 7 and IQ 7+ Microinverters integrate with the Enphase IQ Envoy™, Enphase IQ Battery™, and the Enphase Enlighten™ monitoring and analysis software.

IQ Series Microinverters extend the reliability standards set forth by previous generations and undergo over a million hours of power-on testing, enabling Enphase to provide an industry-leading warranty of up to 25 years.

Easy to Install

- Lightweight and simple
- Faster installation with improved, lighter two-wire cabling
- Built-in rapid shutdown compliant (NEC 2014 & 2017)

Productive and Reliable

- Optimized for high powered 60-cell and 72-cell* modules
- More than a million hours of testing
- Class II double-insulated enclosure
- UL listed

Smart Grid Ready

- Complies with advanced grid support, voltage and frequency ride-through requirements
- Remotely updates to respond to changing grid requirements
- Configurable for varying grid profiles
- Meets CA Rule 21 (UL 1741-SA)

* The IQ 7+ Micro is required to support 72-cell modules.

UL CERTIFIED SAFETY

To learn more about Enphase offerings, visit **enphase.com**

ENPHASE.

Enphase IQ 7 and IQ 7+ Microinverters

INPUT DATA (DC)	IQ7-60-2-US		IQ7PLUS-72-2-US	
Commonly used module pairings[1]	235 W - 350 W +		235 W - 440 W +	
Module compatibility	60-cell PV modules only		60-cell and 72-cell PV modules	
Maximum input DC voltage	48 V		60 V	
Peak power tracking voltage	27 V - 37 V		27 V - 45 V	
Operating range	16 V - 48 V		16 V - 60 V	
Min/Max start voltage	22 V / 48 V		22 V / 60 V	
Max DC short circuit current (module Isc)	15 A		15 A	
Overvoltage class DC port	II		II	
DC port backfeed current	0 A		0 A	
PV array configuration	1 x 1 ungrounded array; No additional DC side protection required; AC side protection requires max 20A per branch circuit			
OUTPUT DATA (AC)	**IQ 7 Microinverter**		**IQ 7+ Microinverter**	
Peak output power	250 VA		295 VA	
Maximum continuous output power	240 VA		290 VA	
Nominal (L-L) voltage/range[2]	240 V / 211-264 V	208 V / 183-229 V	240 V / 211-264 V	208 V / 183-229 V
Maximum continuous output current	1.0 A (240 V)	1.15 A (208 V)	1.21 A (240 V)	1.39 A (208 V)
Nominal frequency	60 Hz		60 Hz	
Extended frequency range	47 - 68 Hz		47 - 68 Hz	
AC short circuit fault current over 3 cycles	5.8 Arms		5.8 Arms	
Maximum units per 20 A (L-L) branch circuit[3]	16 (240 VAC)	13 (208 VAC)	13 (240 VAC)	11 (208 VAC)
Overvoltage class AC port	III		III	
AC port backfeed current	18 mA		18 mA	
Power factor setting	1.0		1.0	
Power factor (adjustable)	0.85 leading ... 0.85 lagging		0.85 leading ... 0.85 lagging	
EFFICIENCY	**@240 V**	**@208 V**	**@240 V**	**@208 V**
Peak efficiency	97.6 %	97.6 %	97.5 %	97.3 %
CEC weighted efficiency	97.0 %	97.0 %	97.0 %	97.0 %
MECHANICAL DATA				
Ambient temperature range	-40°C to +65°C			
Relative humidity range	4% to 100% (condensing)			
Connector type	MC4 (or Amphenol H4 UTX with additional Q-DCC-5 adapter)			
Dimensions (HxWxD)	212 mm x 175 mm x 30.2 mm (without bracket)			
Weight	1.08 kg (2.38 lbs)			
Cooling	Natural convection - No fans			
Approved for wet locations	Yes			
Pollution degree	PD3			
Enclosure	Class II double-insulated, corrosion resistant polymeric enclosure			
Environmental category / UV exposure rating	NEMA Type 6 / outdoor			
FEATURES				
Communication	Power Line Communication (PLC)			
Monitoring	Enlighten Manager and MyEnlighten monitoring options. Both options require installation of an Enphase IQ Envoy.			
Disconnecting means	The AC and DC connectors have been evaluated and approved by UL for use as the load-break disconnect required by NEC 690.			
Compliance	CA Rule 21 (UL 1741-SA) UL 62109-1, UL1741/IEEE1547, FCC Part 15 Class B, ICES-0003 Class B, CAN/CSA-C22.2 NO. 107.1-01 This product is UL Listed as PV Rapid Shut Down Equipment and conforms with NEC-2014 and NEC-2017 section 690.12 and C22.1-2015 Rule 64-218 Rapid Shutdown of PV Systems, for AC and DC conductors, when installed according manufacturer's instructions.			

1. No enforced DC/AC ratio. See the compatibility calculator at https://enphase.com/en-us/support/module-compatibility.
2. Nominal voltage range can be extended beyond nominal if required by the utility.
3. Limits may vary. Refer to local requirements to define the number of microinverters per branch in your area.

To learn more about Enphase offerings, visit **enphase.com**

ENPHASE.

© 2020 Enphase Energy. All rights reserved. Enphase, the Enphase logo, Enphase IQ 7, Enphase IQ 7+, Enphase IQ Battery, Enphase Enlighten, Enphase IQ Envoy, and other trademarks or service names are the trademarks of Enphase Energy, Inc. Data subject to change. 2020-01-06

ESDEC

INNOVATIVE MOUNTING SYSTEMS

CLICKFIT SUPRA

MANUAL USA

MOUNTING SYSTEM FOR SLOPED COMPOSITE SHINGLE ROOFS

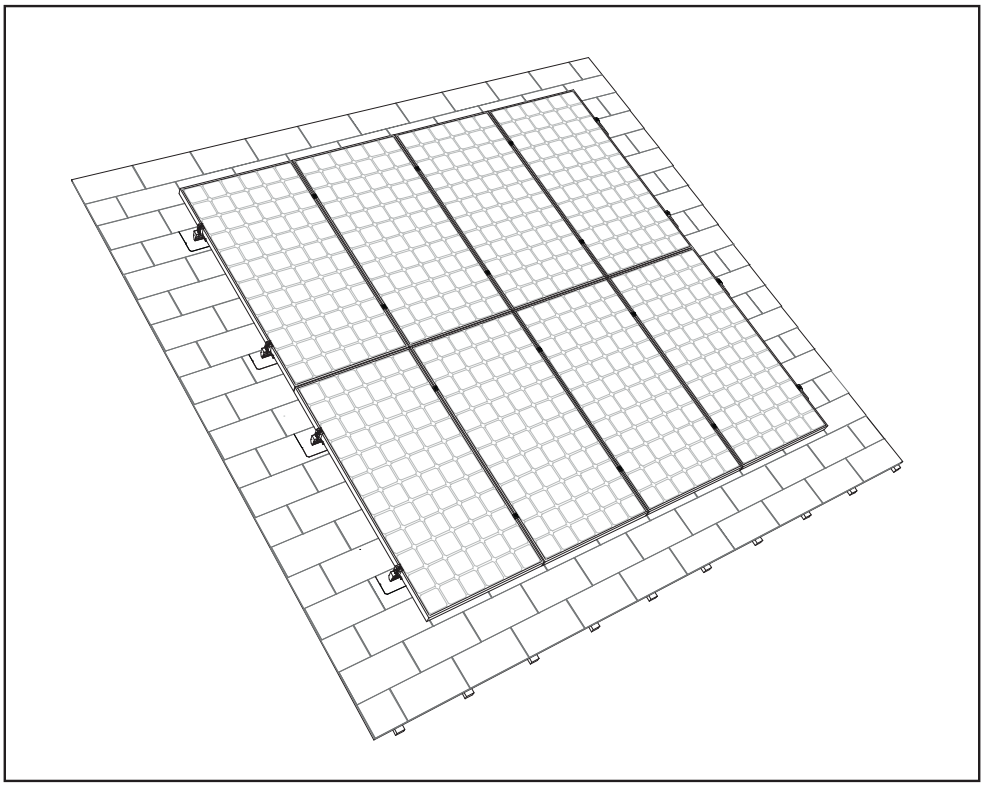

Mounting system for sloped composite shingle roofs with PV modules in portrait orientation

Original Instructions

Rev. 10.10.18

© ESDEC BV 2018

ESDEC bv
Paderbornstraat 4
7418 BP Deventer
The Netherlands

T +31 857 607 220
info@esdec.com
www.esdec.com

IBAN NL64 INGB 0658539531
BTW NL8139.98.955.B01
BIC INGBNL2A

CLICKFIT FLATFIX

All our transactions and sales apply our Terms and Conditions which are filed with the Chamber of Commerce (08127728). These can be downloaded at www.esdec.com

1. Introduction

This manual describes the installation of the ClickFit Supra mounting system for sloped composite shingle roofs (for solar panels set up in portrait orientation).
Read the manual carefully so that you are fully aware of its contents. Follow the instructions in the manual carefully. Always perform the operations in the correct order.
Keep the manual in a safe and dry place. If the manual should get lost, then you may request a new copy from Esdec.

2. Declaration of Conformity

Manufacturer: Esdec BV
Londestraat 16
7418EE Deventer
The Netherlands
Tel: +31 85 702 000

Declares under our responsibility that the ClickFit Supra mounting system is tested and approved by UL (Underwriters Laboratories) in compliance with the following norms (Pending):

UL (Underwriters Laboratory) Standard 2703:
- Grounding and Bonding (incl grounding lug)
- Mechanical Loading
- Waterproofing of the Flashing

Certification Markings:
The system will be clearly marked with the appropiate certification markings.

3. General installation conditions

General
The information, comments and advice in this document are binding and must be checked for completeness and validity. Any non-compliance with the requirements specified in this document could cause that all warranty and product liability claims to become null and void. Esdec reserves the right to amend this document without further notice.

Standards, prescriptions and regulations
Upon installation of the mounting system, it is important to follow the installation manual and the associated standards and codes to prevent accidents. Keep in mind the following applicable codes including, but not limited to:

- IBC (International Building Code)
- IRC (International Residential Code)
- SBC (State Building Codes)
- NFPA (National Fire Protection Association)
- NEC (National Electrical Code)
- UL/ANSI 2703, 1st Edition, dated January 28, 2015 (American National Standards Institute)
- ASCE/SEI-7 (American Society of Civil Engineers)

Supra Mounting and Bonding systems have been tested for bonding with the following Listed Photovoltaic modules: Canadian Solar - CS6K-XXX-M where XXX is 275 to 285.

This racking system may be used to ground and/or mount a PV module complying with UL 1703 only when the specific module has been evaluated for grounding and/or mounting in compliance with the included instructions.

Supra Mounting System was evaluated assuming a 15 Amp maximum series fuse size.

These systems have been evaluated for module-to-system bonding and mechanical load to the requirements of UL/ANSI 2703.

The system's fault current ground path components are: L foot, Rail, Rail Splice, PV module, Mid Clamp, End Clamp and Ground Lugs.

The system is a non-separately derived system. The following components have been evaluated for bonding as the fault current ground path: L foot, Rail, Rail Splice, PV module, Mid Clamp, End Clamp and Ground Lugs.

Planning and building works notification
Make sure to notify the applicable bodies in regards to planning and building works.

Stability and the condition of the roof
The roof must be in good condition and sufficiently strong to carry the weight of the PV modules and the mounting system, including additional weight during installation, additional materials, wind and snow loads according to applicable codes, standards and guidelines. Check the stability and condition of the roof and the roofing membrane and adjust or replace the roof/structure/membrane where necessary, engage a specialist roofing contractor when in doubt. Make sure that the load reserve of the roof is not exceeded locally or as a whole.

Application range ClickFit Supra
- Roof height: 10-30ft. If the roof is higher, please contact Esdec directly or your local dealer/distributor.
- Type of roof covering: Bitumen shingles. Check roofing manufacturer for compatibility and suitability.
- Roof pitch: Between 10-60 degrees
- The maximum allowable wind, snow load etc. will be determined by the ClickFit Supra Design Assistant.
- The ClickFit Supra Design Assistant can be found on our website www.esdec.com or can be requested trough customer support.

Edge zone
Keep at least 1 foot of clearance from the ridge, gutter and eaves of the roof. Also leave enough room to safely move around the array during installation. Some building codes and fire codes require different clearances around the array, and the installer should check local building code requirements for compliance.

Dimensions
All sizes and dimensions are in inches, feet and/or millimeters, centimeters unless stated otherwise.

Weather tightness of the roof
- Install all components as specified within this installation manual to ensure weather tightness of the roof.
- Refer the roof/roofing manufacturer in regards to the suitability and compatibility of the system.

Storage
Make sure to store all materials dry and properly upon receipt to prevent damage and corrosion and to ensure the quality and durability of the products.

Health, Safety and Responsibility
- Comply with all applicable local or national building and fire codes, electrical codes, building codes, etc including any that may supersede this manual. Please refer to the “Standards, prescriptions and regulations” chapter in this document for more details.
- All appropriate Health and Safety regulations should be followed correctly when installation the PV system.
- Ensure the installation is undertaken by a licensed solar professional with adequate knowledge of working on heights and roofs and in strict accordance to this manual.
- All electrical installation and procedures should be conducted by a licensed and bonded electrician or solar contractor.
- Ensure all products are appropriate for the installation and environment.
- Ensure provided information is accurate. Issues resulting from inaccurate information is the installer’s responsibility.
- Use only Esdec parts or parts recommended by Esdec; Adding, removing or substituting parts may void any applicable warranty.
- Ensure bare copper grounding wire does not contact aluminum and zinc-plated steel components, to prevent risk of galvanic corrosion.
- Refer to the roof/roofing manufacturer in regards to the suitability and compatibility of the system.
- Refer to the PV module, inverter and cable manufacturers installation manuals for details on the handling and installation of their equipment.
- Always wear the correct protective clothing when performing the work, such as but not limited to: gloves goggles, safety shoes and a helmet.
- Always work with fall protection and, if necessary, with safety nets and edge protection when working on roofs.
- The roof must be clean, dry and free from any obstruction including, rodent nests or algae, etc.
- The roof should be in good condition. Please refer to chapter “Stability and the condition of the roof” for more details.
- Never install or access the roof during strong winds or when slippery.
- Always use a lifting aid/hoist installation when moving equipment (mounting system, PV modules, etc.).
- Refer to Esdec’s calculation tool for specific design details including allowable rail spans, rail spacing, L-bracket spacing, splice locations, clamp locations, etc. Installer must cross check the results for compliance with the applicable codes and standards in regards to wind and snow loads.
- Periodic inspection of the PV system should be done frequently. Please refer to the “Maintenance” chapter in this document for more details.

Maintenance
The installation shall be periodically re-inspected for loose components, loose fasteners and corrosion, such that if found, the affected components are to be immediately replaced. When preforming routine maintenance make sure not to break or disturb the bonding path of the system.

The following points need to be checked on a yearly basis and after each storm with wind speeds >9Bft.:

- The tightness of all bolts, nuts and screws.
  - o Action: Tighten or replace all bolts, nuts, screws and clamps where necessary according to the installation manual and report it to Esdec including photographs.

- Overall visual inspection of the system (corrosion of components, etc).
  - o Action: replace all bolts, nuts, screws and clamps where necessary according to the installation manual and report it to Esdec including photographs.

Removal and demounting

At the end of the life time of the product when removing the system the installer must remove and discard of the products according to local laws and regulations.

Warranty

Esdec warrants each new ClickFit Supra mounting system to be free from defects in material and workmanship under normal use and service for a period of 20 year from date of original sale. Please refer to the Esdec general terms and conditions for full details.

Liability

The manufacturer accepts no liability for damage or injury caused by not (strictly) adhering to the safety prescription and instructions contained in this manual, or by carelessness during installation of the product specified in this document and the eventual related accessories. Please refer to the Esdec general terms and conditions for full details on liabilities.

Support

For technical or customer support please contact:

Esdec BV
Londenstraat 16
7418EE Deventer
The Netherlands

www.esdec.com/clickfitusa
sales@esdec.com
call us at: 1800-374-5551
or contact your local dealer/distributor.

• printing errors may occur, no rights or obligations may be derived from this fact.

4. Product description

The ClickFit Supra mounting system for composite shingle roofs consists of aluminum rails and brackets on which the PV modules are clamped.

The aluminum rails are fixed to L-Brackets which are fastened to the roof (framing member, rafters, trusses).
The rail is designed to span 4-8 ft. The distance between the L-Brackets will depend on wind & snow load and the positions of the roof framing member. A flashing plate is needed to create a watertight seal between the L-Bracket and the roof.

The rails can be interconnected using a splice. The splice slides inside the rail. The splice will be fixed and interconnected to the mounting rail using mounting screws which go through the rail and the splice, ensuring a grounding/bonding path.

A grounding lug and grounding wire will be fastened to the mounting rails which will ensure a grounding/bonding path of all the connected components. The modules will be clamped onto the rail.
A grounding clip is used between the rail and the PV modules to ensure a grounding/bonding path between the rails and the PV modules.

The PV modules are attached by means of module clamps, end clamps and mounting bolts.
End clamps will be mounted on the edges of the PV array. Module clamps will be mounted between the PV modules.
The clamps are fastened to the rails using mounting bolts. The mounting bolts are screwed directly into the pre-threaded rail.
Optional cable ties can be used to bind the cables to the mounting system.
Optional end caps can be placed onto the rail ends and optional color caps can cover the mounting bolts for an esthetic look.

A specification sheet of all the materials used can be found in the declaration of performance.

5. Components overview

5.1 Exploded view

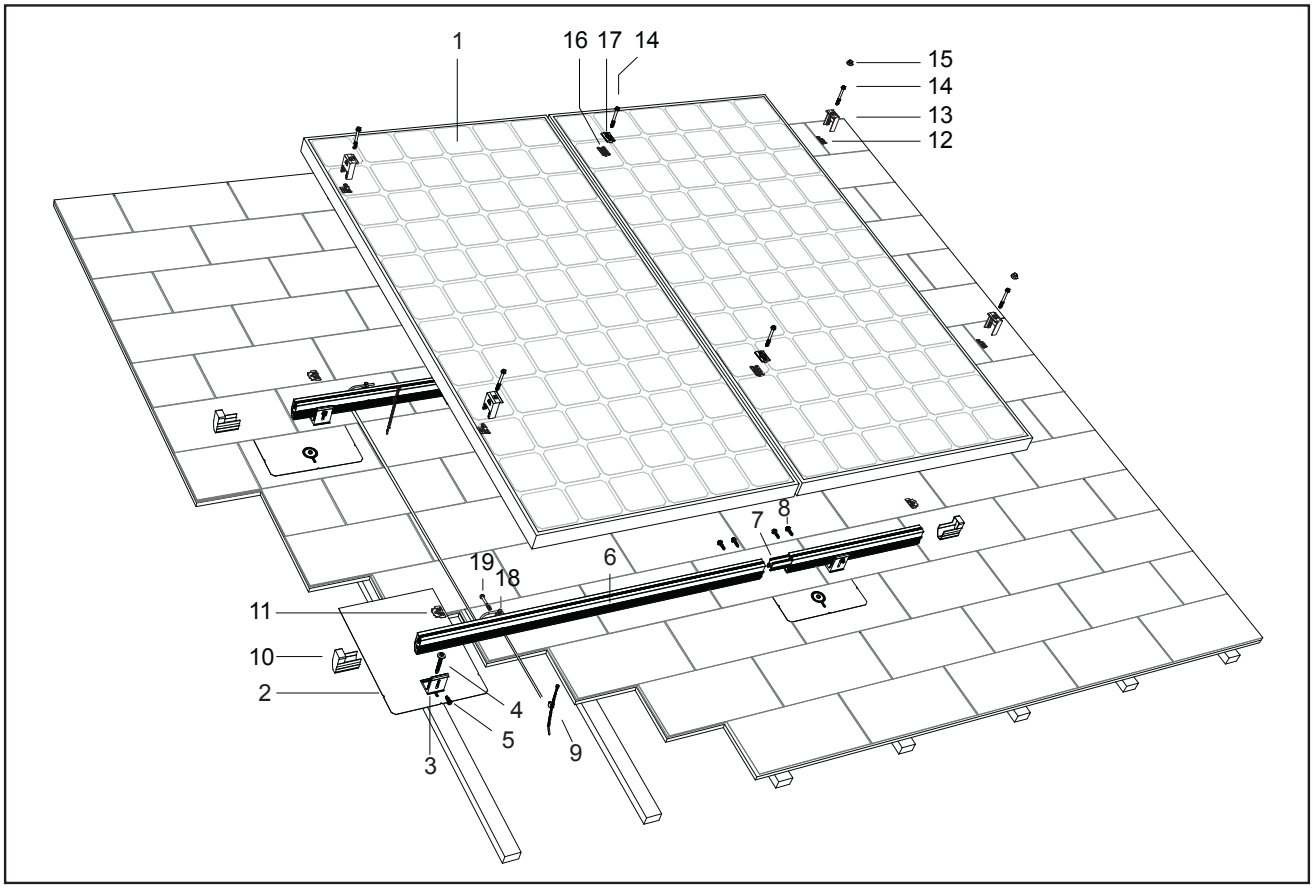

5.2 Component list

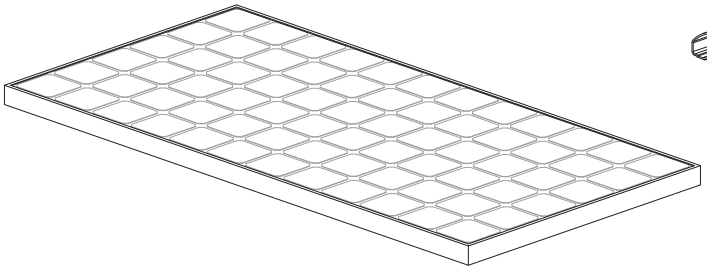

1. PV module

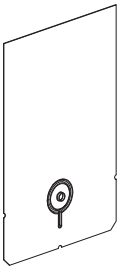

2. Flashing plate
   Article no.: 100-5063

3. L-Bracket
   Article no.: 100-5040

4. Lag bolt 1/4” x 3”
   (6.5 x 76 mm)
   Article no. 100-5087

4A. Lag bolt 1/4” x 4”
   (6.5 x 101 mm)
   Article no. 100-5089

5. Mounting bolt 1/4”-20 x 3/4”
   (6.5 x 20 mm)
   Article no: 100-5080

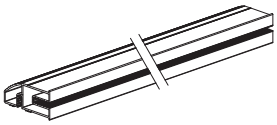

6. Mounting rail 7 ft (2130 mm)
   Article no: 100-5001

6A. Mounting rail 14 ft (4265 mm)
   Article no: 100-5002

7. Splice
   Article no. 100-5061

8. Mounting screw 1/4” x 3/4”
   (6.0 x 20 mm)
   Artikel nr: 100-5082

9. Cable ties
   Article no.: 100-5067

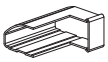

10. End cap set black (optional)
   Article no.: 100-5060-B

10A. End cap grey (optional)
   Article no.: 100-5060

11. End clamp rail bonding clip
   Article no. 100-5091

12. End clamp bonding clip
   Article no. 100-5090

13. End clamp CFA
   Article no.: 100-5022

   End clamp CFB
   Article no.: 100-5023
   For type see appendix ch. 8.1

13A. End clamp CFA black
   Article no.: 100-5022-B

   End clamp CFB black
   Article no.: 100-5023-B
   For type see appendix ch. 8.1

14. Mounting bolt 1/4”-20 x L
   (6.5 x L mm)
   Article no: 100-508_
   For type see appendix ch. 8.1

15. Color cap black (optional)
   Article no.: 100-5066

16. Module clamp bonding clip
   Article no.: 100-5069

17. Module clamp
   Article no.: 100-5020

17A. Module clamp black
   (optional)
   Article no.: 100-5020-B

18. Grounding lay-in
   WEEB-LUG 6.7
   Article nr: 100-5576

19. Mounting bolt 1/4”-20 x 2”
   (6.5 x 51 mm)
   Article no: 100-5083

6. Mounting preparation

6.1 Control of tools and accessories

The following is a list of the required tools/accessories:

Felt-tip pen/chalk

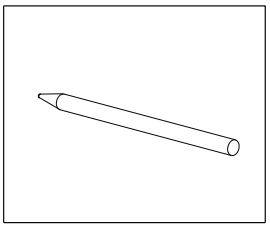

Chalk line

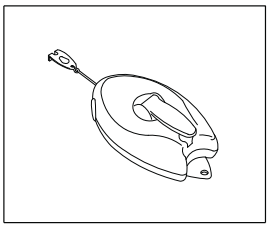

Tape measure

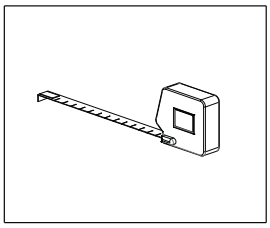

Stud Finder

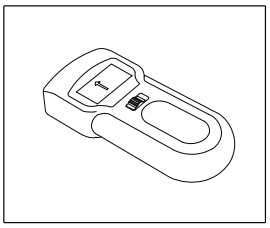

Iron saw

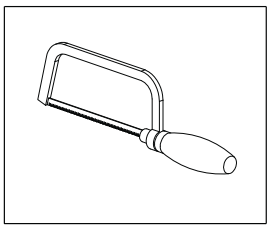

Battery-operated impact driver

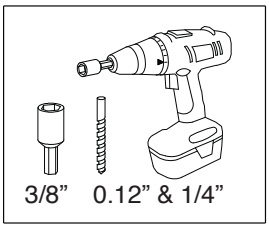

Ratchet with hexagon cap

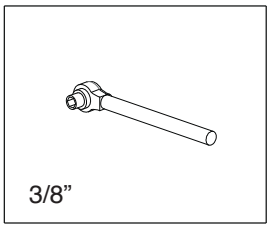

Brush

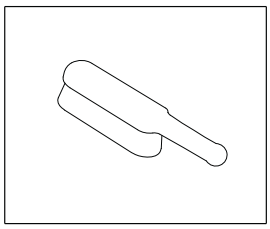

Roofing bar

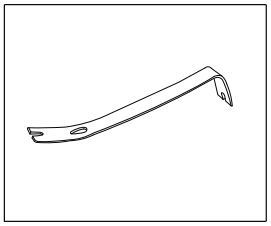

Safety gloves

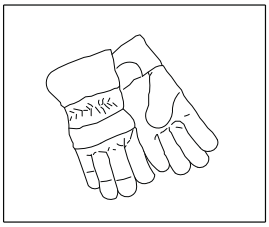

Safety helmet

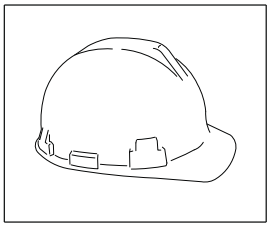

Safety glasses

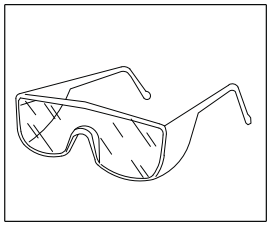

safety clothes

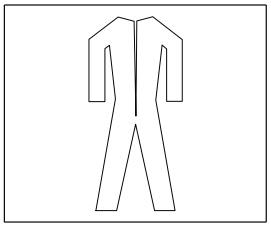

Safety shoes

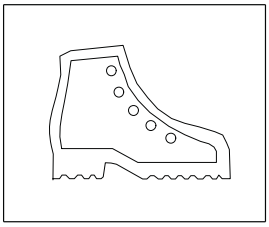

Dust mask

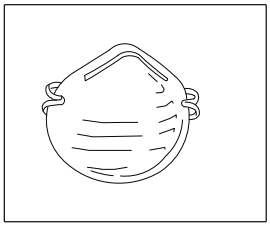

Ear protection

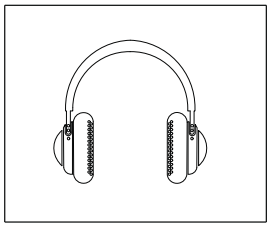

Scaffold or stable safe ladder

6.2 Determining position and measuring of PV modules

In determining the location of the PV modules on the roof it is important to pay attention to the amount of sun on the roof throughout the day and throughout the year. Shadow of a chimney, dormer, trees and nearby buildings have a strong negative effect on the yield of the PV modules.

Measuring and marking out

The area needed for a PV module array depends on the make and model of the PV module used. Use the ClickFit Supra Design Assistant to determine the exact size of the PV module array.
Make sure to keep out of the edge zone of the roof. Keep at least 1 foot of clearance from the ridge, gutter and eaves of the roof and of obstacles. Please refer to chapter Edge zone for more details.
Mark the outlines of the PV module array on the roof with a chalk or a felt-tip pen.

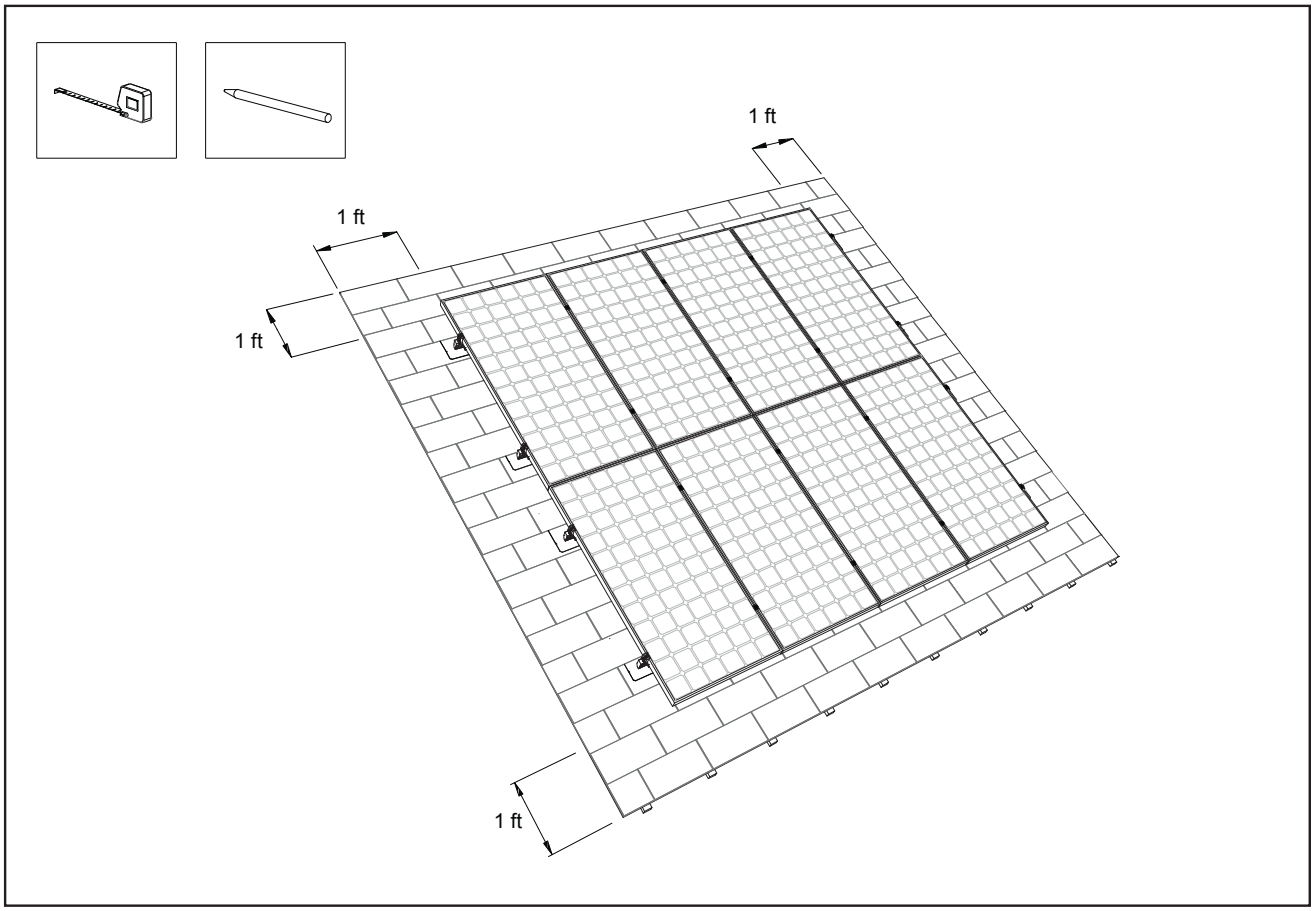

6.3 Cleaning the roof

Clean the shingles of the roof with a brush.
Remove any debris, gravel, algae, moss, etc. to minimize unevenness during installation and prevent leaks over time!

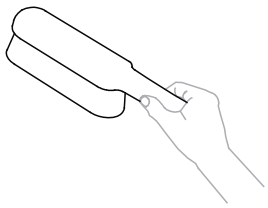

7. Installation

7.1 Determining the fixation positions

Use the position of the PV module array and keep the position of the roof framing members in mind to determine the exact fixation positions. Please refer to the ClickFit Supra Design Assistant for the location and number of the fixation points needed for the PV module array.

Marking the fixation positions

1. Locate the roof framing member by using a stud finder for example. Select the roof framing member where the PV module array should be fixed to.
   (See ClickFit Supra Design Assistant for the position and maximum distance between the fixation points).

2. Mark the centers of the selected roof framing members.

3. Mark the intended position of the horizontal lines on the roof where the mounting rails will be placed.

Important:

- The roof must be measured and inspected and marked accurately before the installation of the PV module array. The condition of the roof, roofing membrane and selected roof framing members should be good.
- Please refer to annex for limitations and further details.
- Please note the manufacturer's warranty in relation to the position of the module clamps.

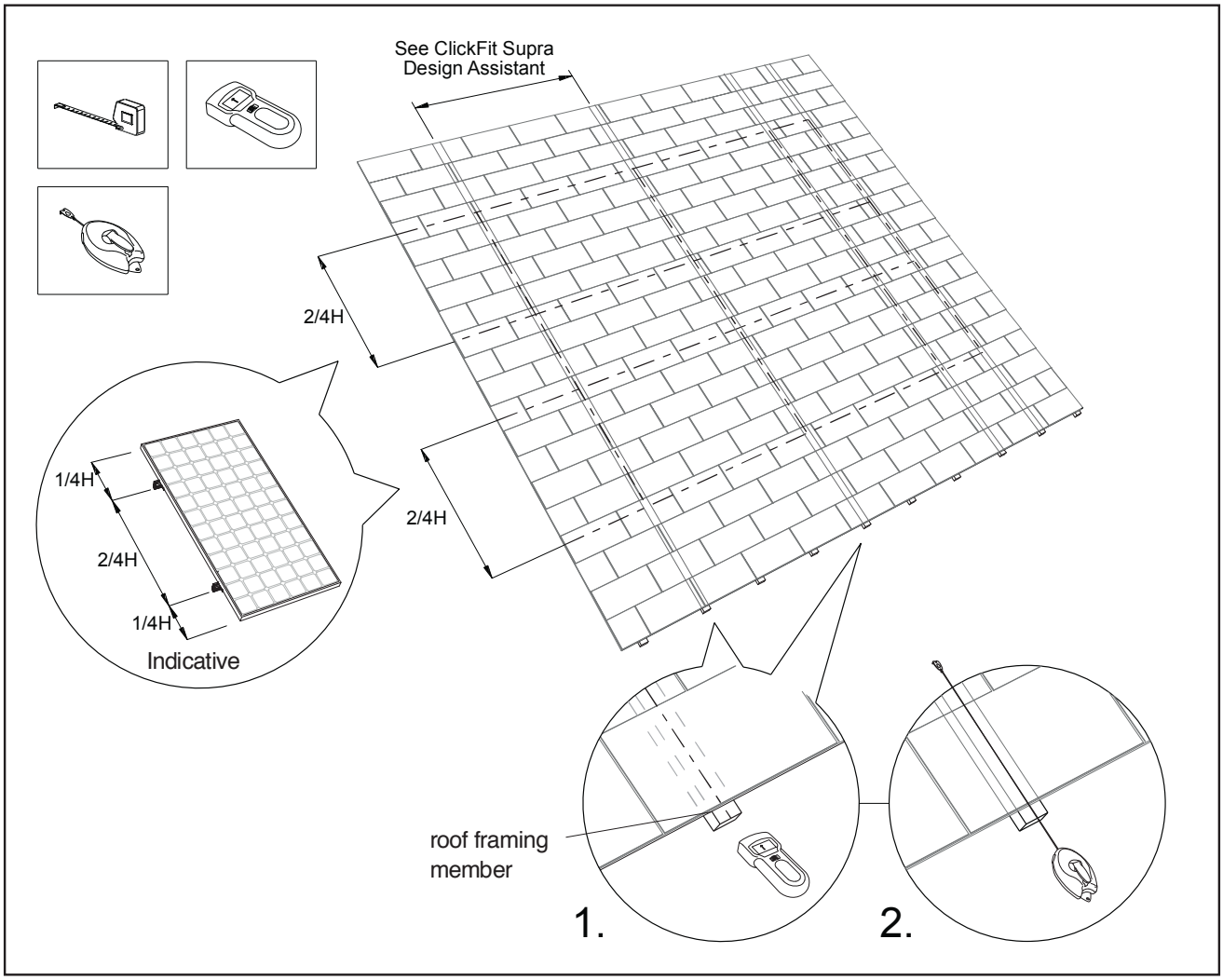

7.2 Positioning flashing plates on the roof

1. Carefully lift the composite roof shingles with a roofing bar, at the marked fixation position. Remove nails where required. Slide the flashing plates underneath of shingle.

2. Drill a 0.12” pilot hole into the roof framing member through the hole in the flashing plate. Make sure that the pilot hole is no deeper than 1.5 inch and to drill perpendicular to the roof. Clean off any sawdust and or debris between the flashing plate and the roof.

3. Repeat these steps for all flashing plates.

Important:

- Make sure that all fixation points are positioned in the center of the roof framing member and ensure that the roof framing member is solid. If the roof framing member is not found or is not solid then seal the pilot hole immediately with an appropriate roofing sealant.
- Please refer to annex for limitations and further details.

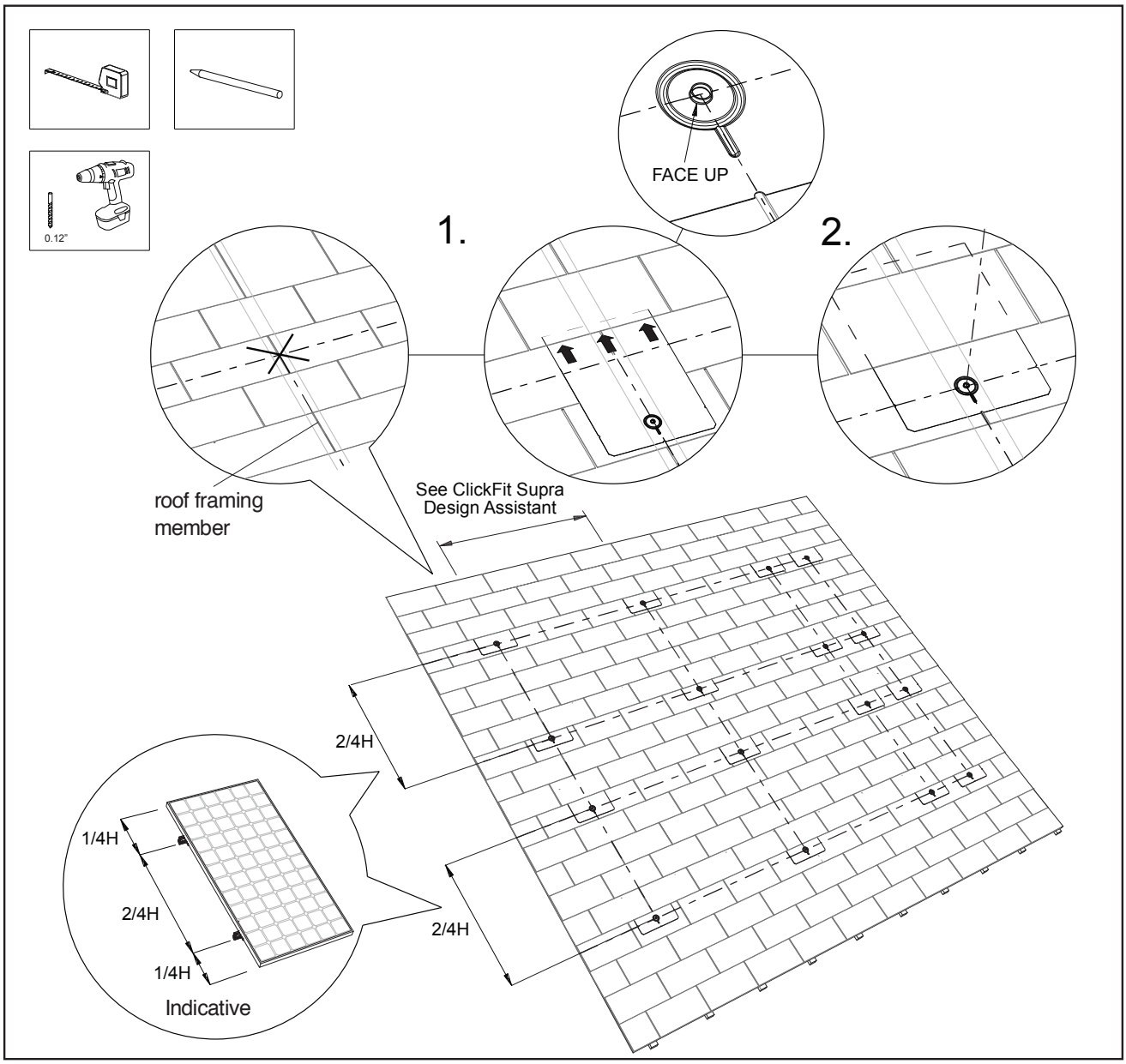

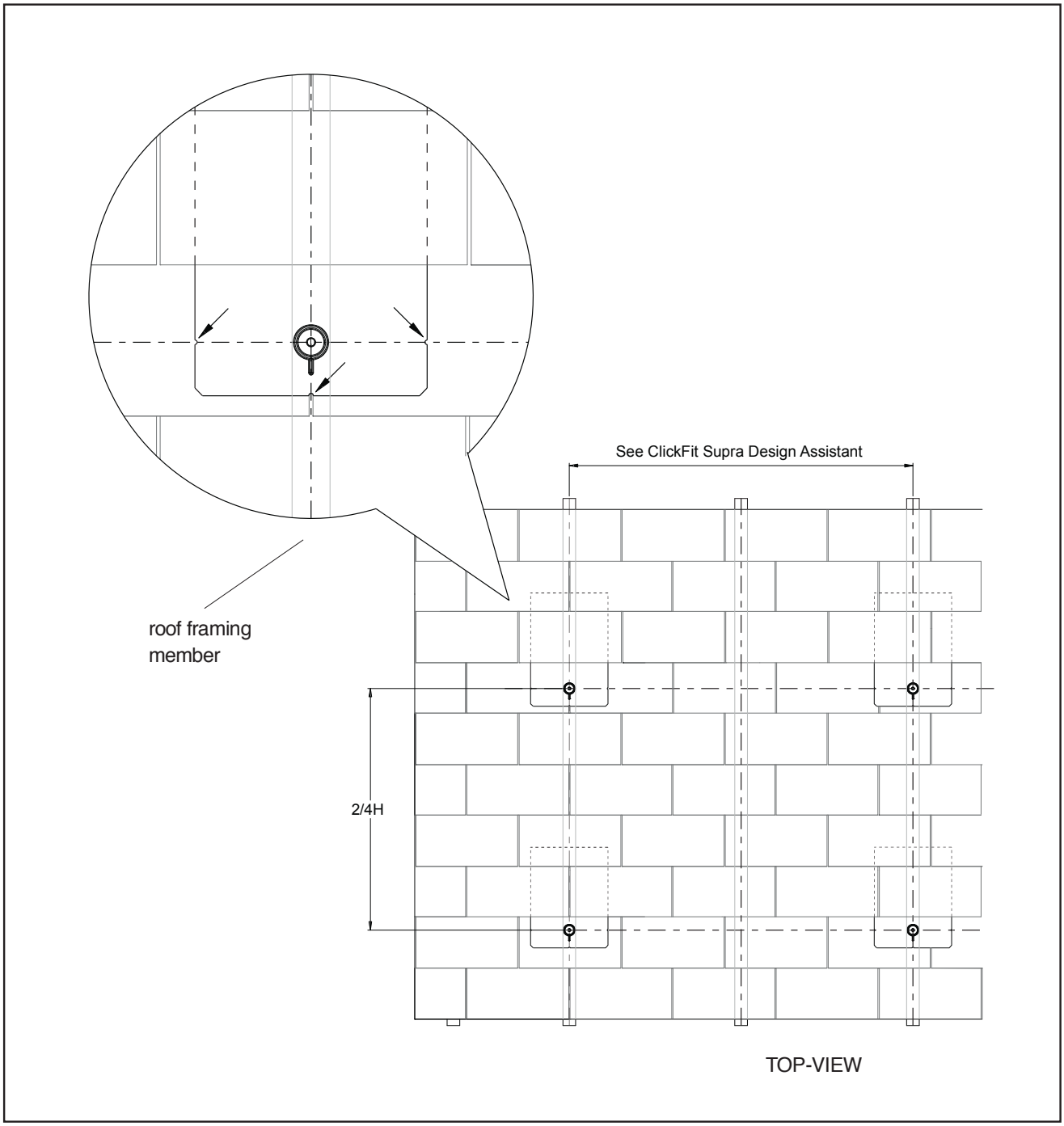
See ClickFit Supra Design Assistant
roof framing
member
2/4H
TOP-VIEW

7.3 Mounting the L-brackets

1. Place the L-brackets on the flashing plates. Make sure that the holes of the L-bracket and the flashing plate are aligned with the pilot hole and that the correct side of the L-bracket is facing upwards. The L-bracket should sit nicely and evenly on the flashing plate. Make sure that there is no sawdust or debris between the L-bracket and the flashing plate.

2. Fasten the L-brackets to the roof with the Lag bolt and tighten the mounting bolt in accordance to the torque values provided in the annex.

3. Repeat these steps for all the L-brackets.

Important:

- Make sure the Lag bolt goes straight into the roof framing member. Do not overtighten the bolts, as soon as the rubber ring on the bolts distorts slightly the bolt is fastened correctly and the roof is watertight.
- Make sure that the L-brackets are perfectly aligned.
- Please refer to annex for limitations and further details.

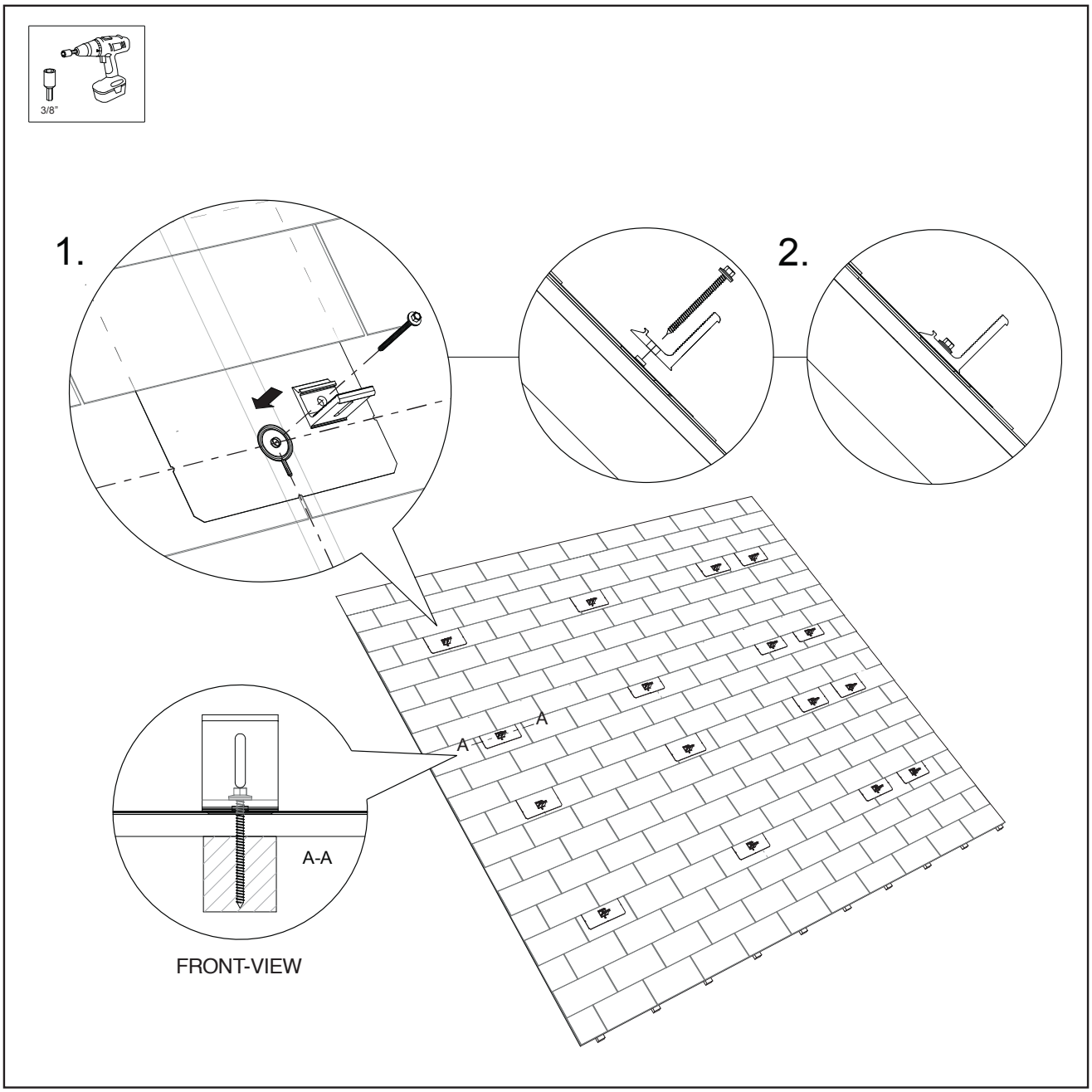

7.4 Pre-mounting the splice in the mounting rail

Multiple mounting rails can be connected to each other using the splice. The splice slides inside the rail.

1. The splice will be fastened to the mounting rail using two mounting screws on the end of the mounting rail. Mark the position of the pilot holes on the mounting rail according to the measurements in the annex. Drill the pilot holes into the mounting rails prior to splice assembly, using a 1/4“ drill bit.
2. Align the two rail ends next to each other and slide the splice in both ends of the rails according to measurements in the annex.
3. Fasten the splice to the mounting rail with the mounting screws 1/4“ x 3/4“ (6.0x20 mm). Tighten the mounting screw in accordance to the torque values provided in the annex.
4. Repeat these steps for all mounting rails that need to be connected.

Important: Please refer to annex for limitations and further details.

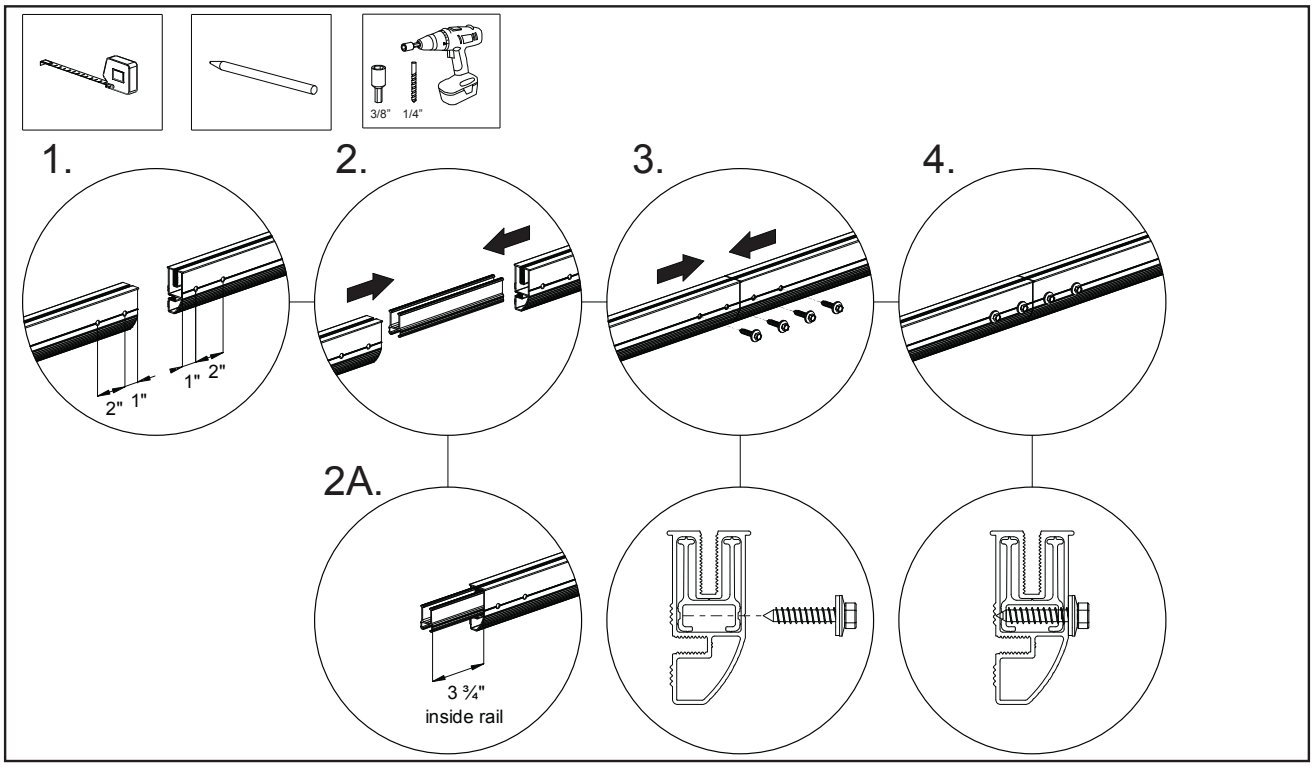

7.5 Trimming the final mounting rail

1. Check the total required length of the mounting rail as indicated by the ClickFit Supra Design Assistant.
2. Mark and cut the excess rail at the end of the mounting rail.
3. Repeat these steps for all the other mounting rails that need trimming.

Important: Please refer to annex for limitations and further details.

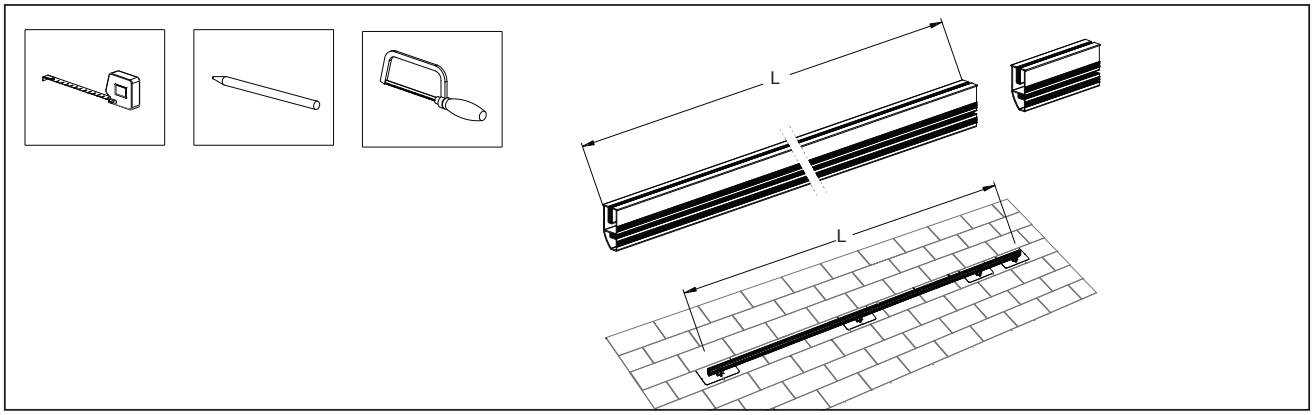

7.6 Securing mounting rail

1. Place the mounting rail on the L-brackets. Fasten the mounting rail onto the L-brackets, using the Mounting bolts 1/4“-20 x 3/4“ (6.5 x mm). Make sure that the mounting rails are aligned and that the mounting rail is positioned correctly on the L-brackets. Tighten the bolts just enough to allow the rail to be adjusted up and down in the slotted hole of the L-bracket.

2. Level all the rails to the desired height.

3. Tighten all the mounting bolts in accordance to the torque values provided in the annex.

Important:

- Please refer to annex for limitations and further details.

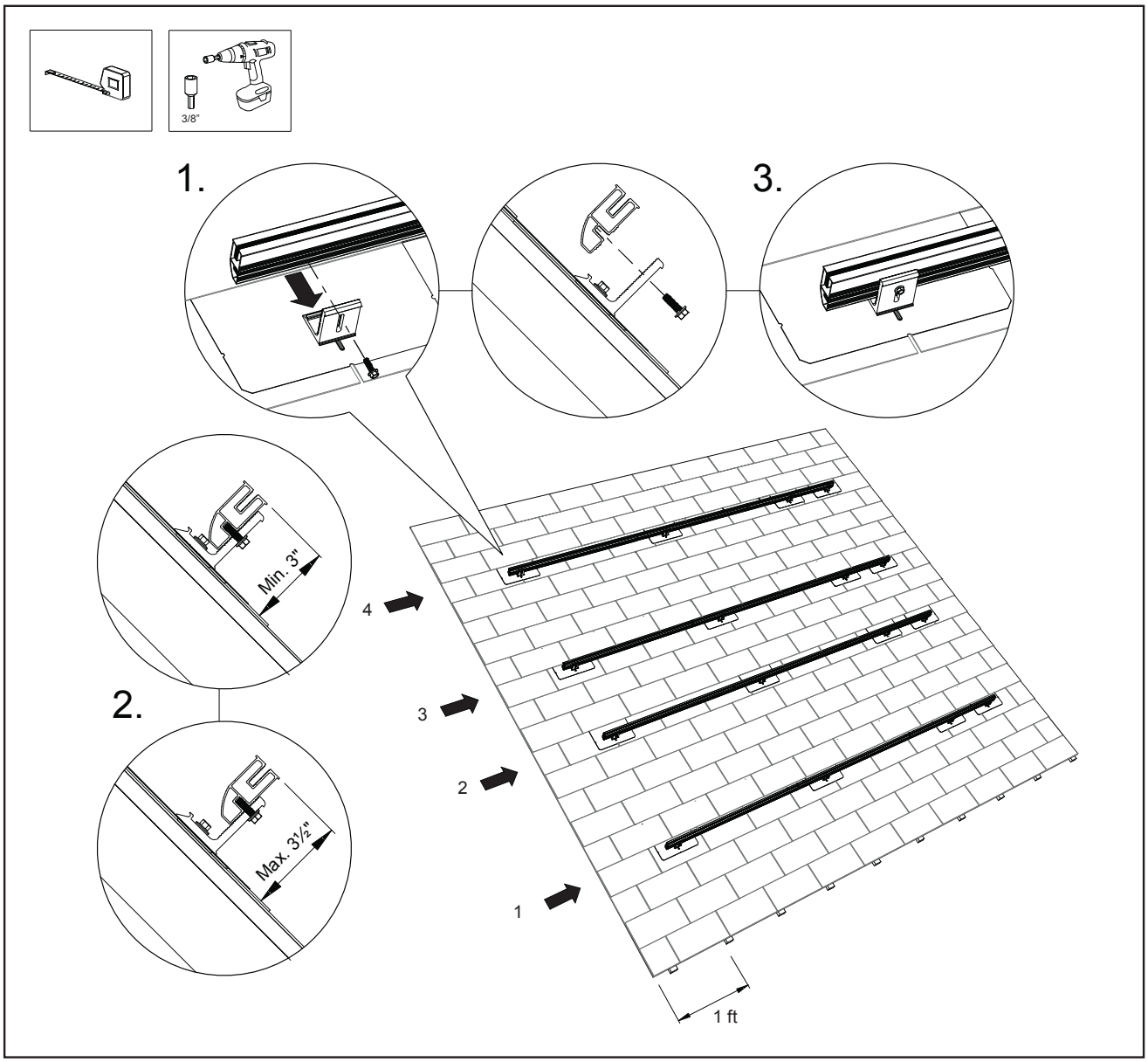

7.7 Positioning and mounting cable ties and cables (Optional)

1. Firmly press the fixing pin of the cable ties into the slot at the bottom of the rail.

2. Run the cable and connectors through the open cable ties. Close the cable tie once all cables have been placed and tighten firmly.

3. A recommended distance between the cable ties is 1.5 ft (450 mm).

Important:

- Please refer to annex for limitations and further details.

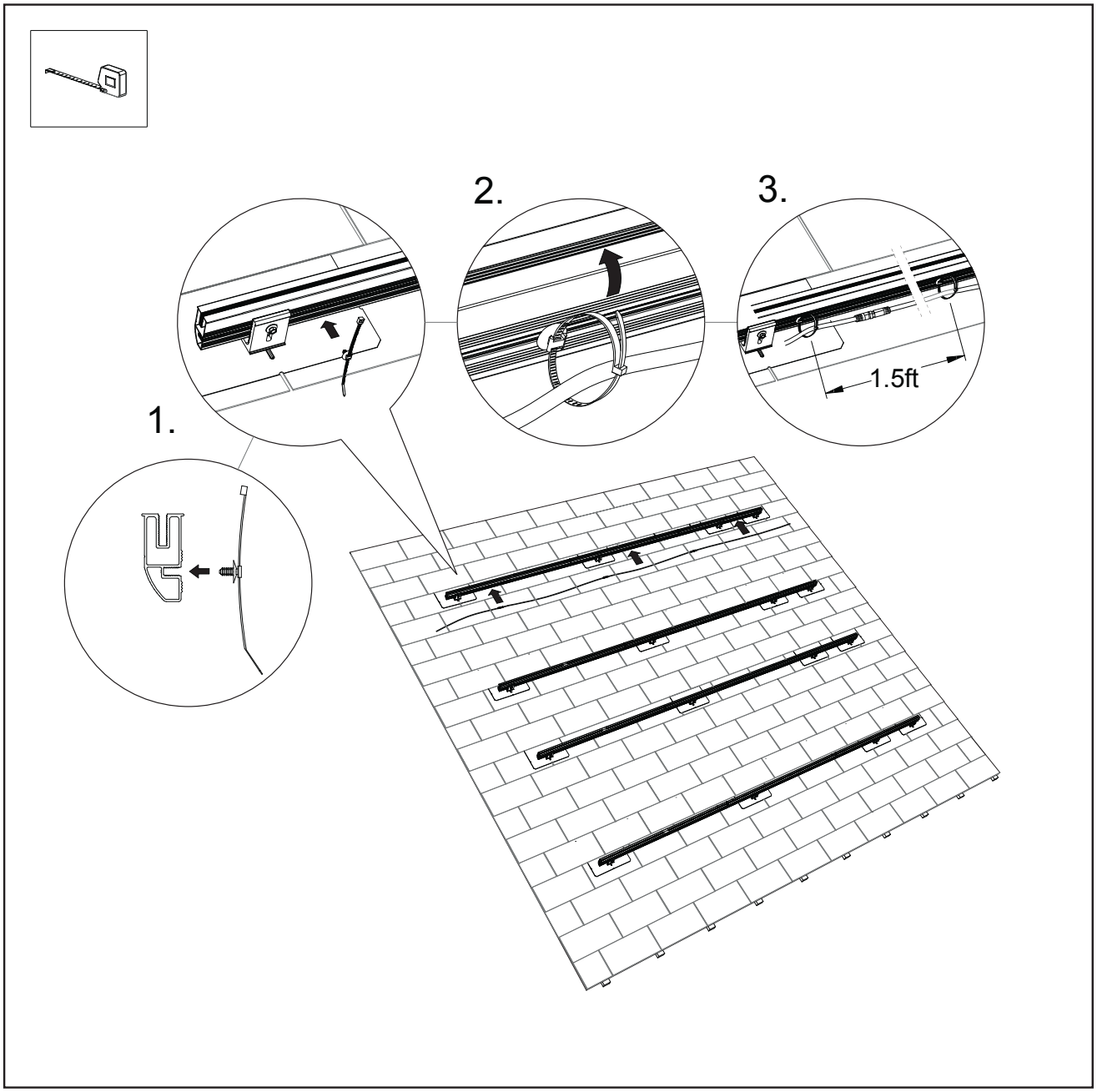

7.8 Mounting of Grounding Lug

The following grounding lug must be used (field provided):
Type: WEEB-LUG-6.7
Manufacturer: Burndy

1. Assess correct positioning of the grounding lug on the rail.

2. Install grounding lug according to manufacturer's installation manual.
   a. Drill 1/4" Pilot hole through the rail for Grounding lug assembly mounting bolt
   b. Insert 1/4"-20 x 2" (6.5 x51mm) bolt through the mounting rail
   c. Mount WEEB 6.7 Grounding lug to bolt and attach washers and nut. Torque setting 120 lbs-in / 13.5 Nm
   d. Attach grounding wire to assembly and torque the wire clamp bolt to 90 lbs-in / 10 Nm (grounding wire size and type to be in accordance with National Electric Code and/or local)
   e. Route grounding cable between rails as shown in the drawing below.

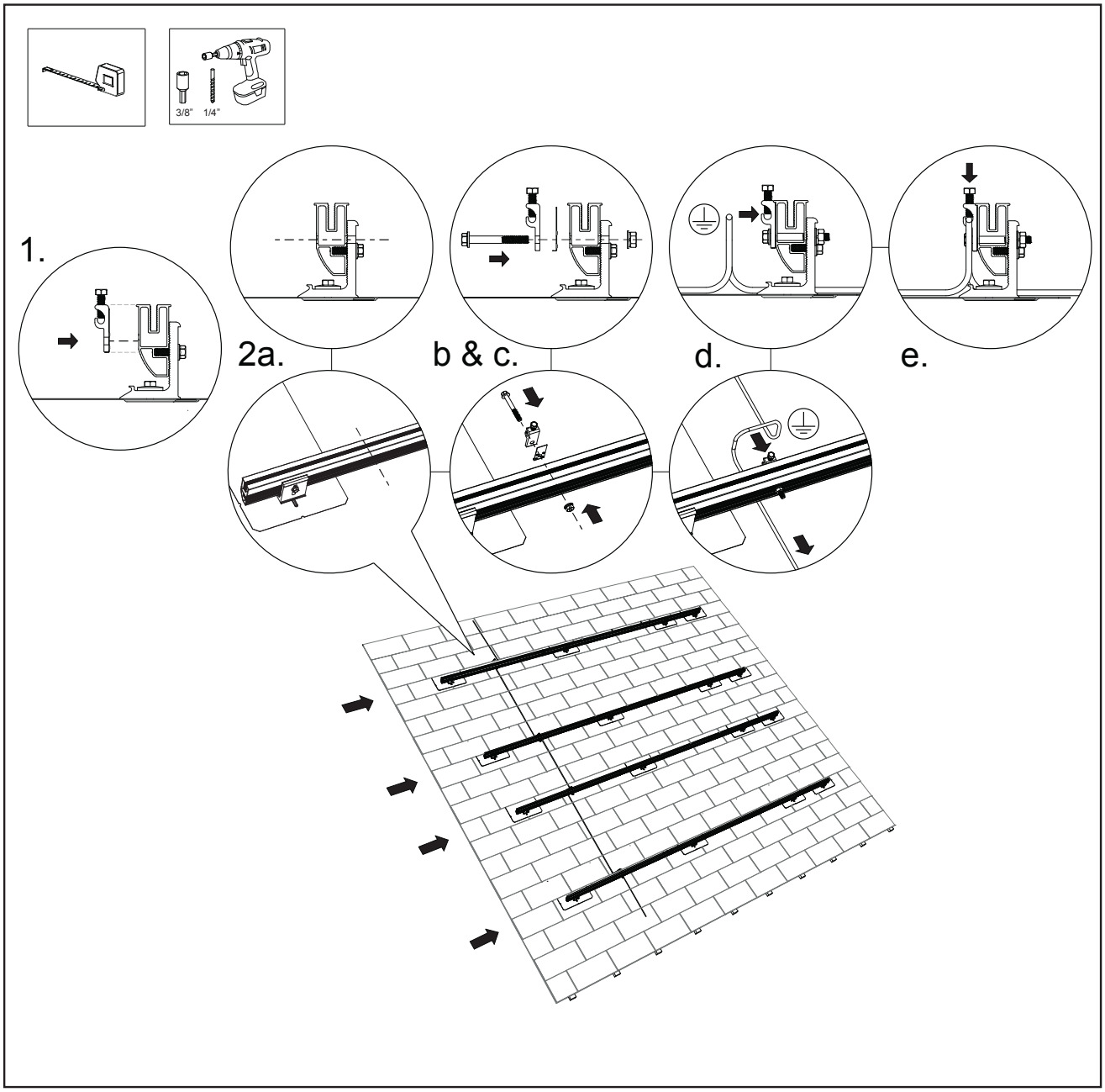

7.9 Bonding and mounting of first PV module on the rails

1. Slide the End clamp rail bonding clip on the mounting rail at the positions where the first PV module will be fastened to the mounting rail.
2. Place the first PV module onto the rail ensuring the bonding clip is in position.
3. Preassemble the Mounting bolt, End clamp bonding clip and End clamp. Ensure not to insert the Mounting bolt too far into the End clamp bonding clip.
4. Slide the End clamp onto the mounting rail. Choose the correct slot in the end clamp, make sure that the end clamp fits the PV module. Fasten the end clamp with the Mounting bolt. Ensure that the Mounting bolt will go through the hole of the End clamp rail bonding clip. Tighten the mounting bolt in accordance to the torque values provided in the annex.
5. Place the color caps over the mounting bolts and press it on firmly (optional for use with black modules and clamps).
6. Slide the end caps onto the mounting rail ends and press it on firmly (optional for use with black modules and clamps).

Important:

- Make sure that the PV modules are aligned correctly before tightening the mounting bolts.
- Please refer to annex for limitations and further details.

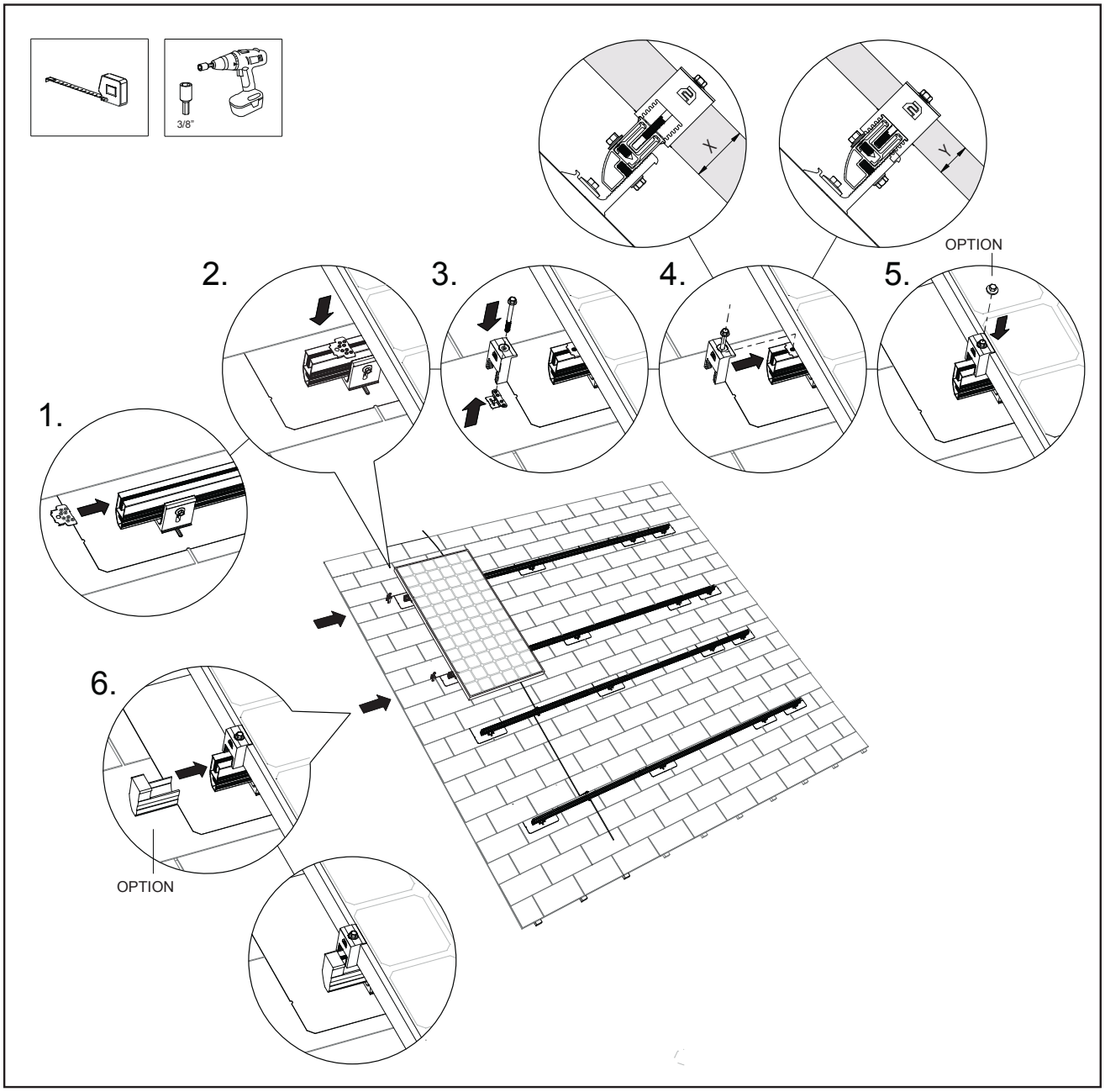

7.10 Bonding and mounting of other PV modules on the rails

1. Preassemble the Module clamp bonding clips onto the Module clamps.
2. Place the second PV module on the mounting rail and slide the PV module towards the first one until a gap remains of approximately 0.28 inch (7 mm). Clamp the PV module on to the rail using the Module clamp and the Mounting bolts 1/4” -20 x L (6.5 x L mm). Tighten the mounting bolts in accordance to the torque values provided in the annex.
3. over the mounting bolts with the color caps (optional for use with black modules and clamps).

Important:

- Make sure that the PV modules are aligned correctly before tightening the mounting bolts. Repeat these steps for the remaining PV modules in the same row.
- Please refer to annex for limitations and further details.

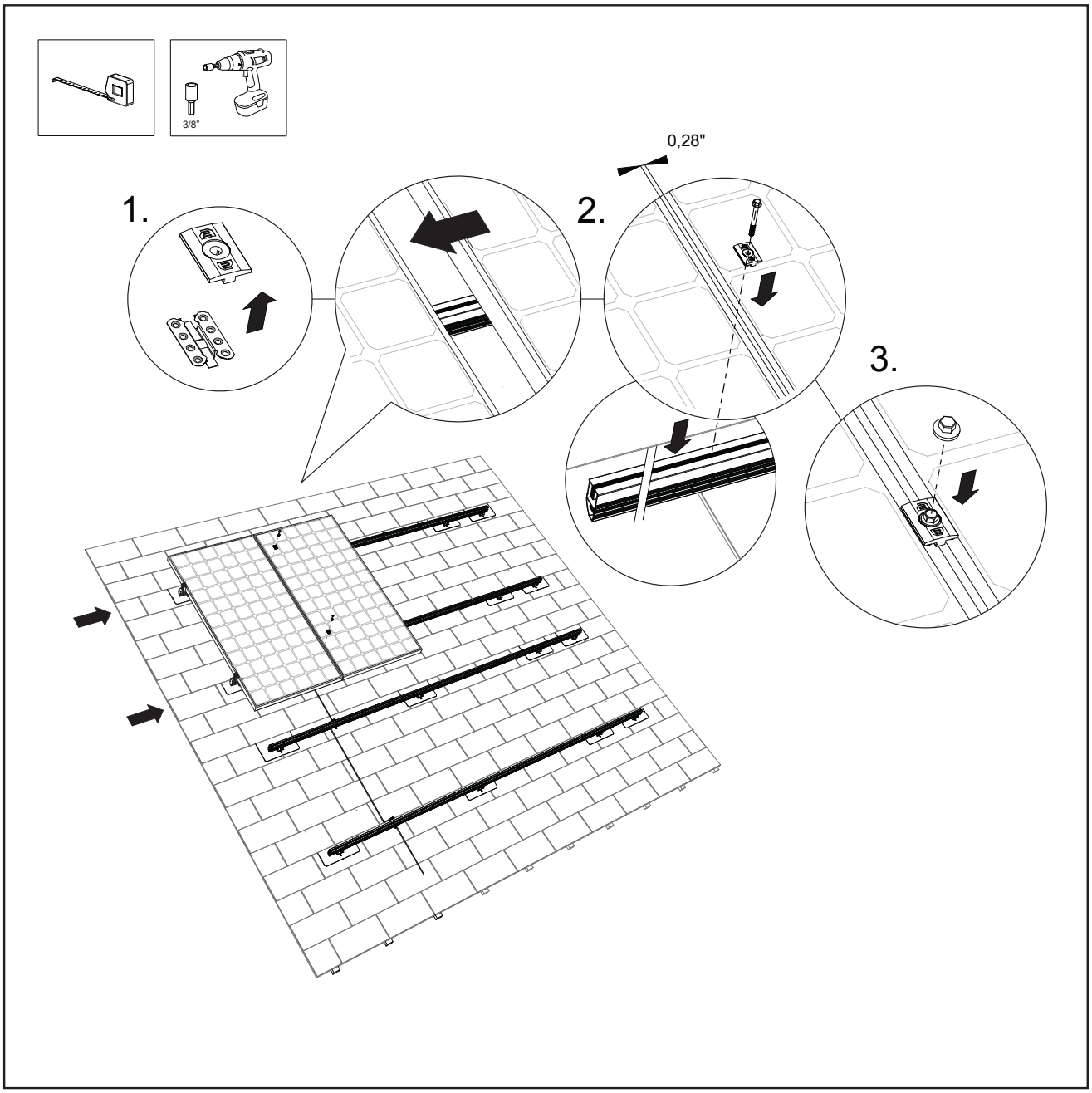

7.11 Bonding and mounting of the last PV module in a row

1. Slide the End clamp rail bonding clip on the mounting rail at the positions where the first PV module will be fastened to the mounting rail.
2. Place the last PV module of the row on the bonding clips on the mounting rail and slide the PV module towards the penultimate PV module until a gap remains of approximately 0.28 inch (7 mm).
3. Preassemble the Mounting bolt, End clamp bonding clip and End clamp. Ensure not to insert the Mounting bolt too far into the End clamp bonding clip.
4. Slide the End clamp onto the mounting rail. Choose the correct slot in the end clamp, make sure that the end clamp fits the PV module. Fasten the end clamp with the Mounting bolt. Ensure that the Mounting bolt will go through the hole of the End clamp rail bonding clip. Tighten the mounting bolt in accordance to the torque values provided in the annex.
5. Slide the end caps onto the rail ends and press it on firmly (optional for use with black modules and clamps).
6. Place the color caps over the mounting bolts and press it on firmly (optional for use with black modules clamps).

Important:

- Make sure that the PV modules are aligned correctly before tightening the mounting clamp bolts.
- Please refer to annex for limitations and further details.

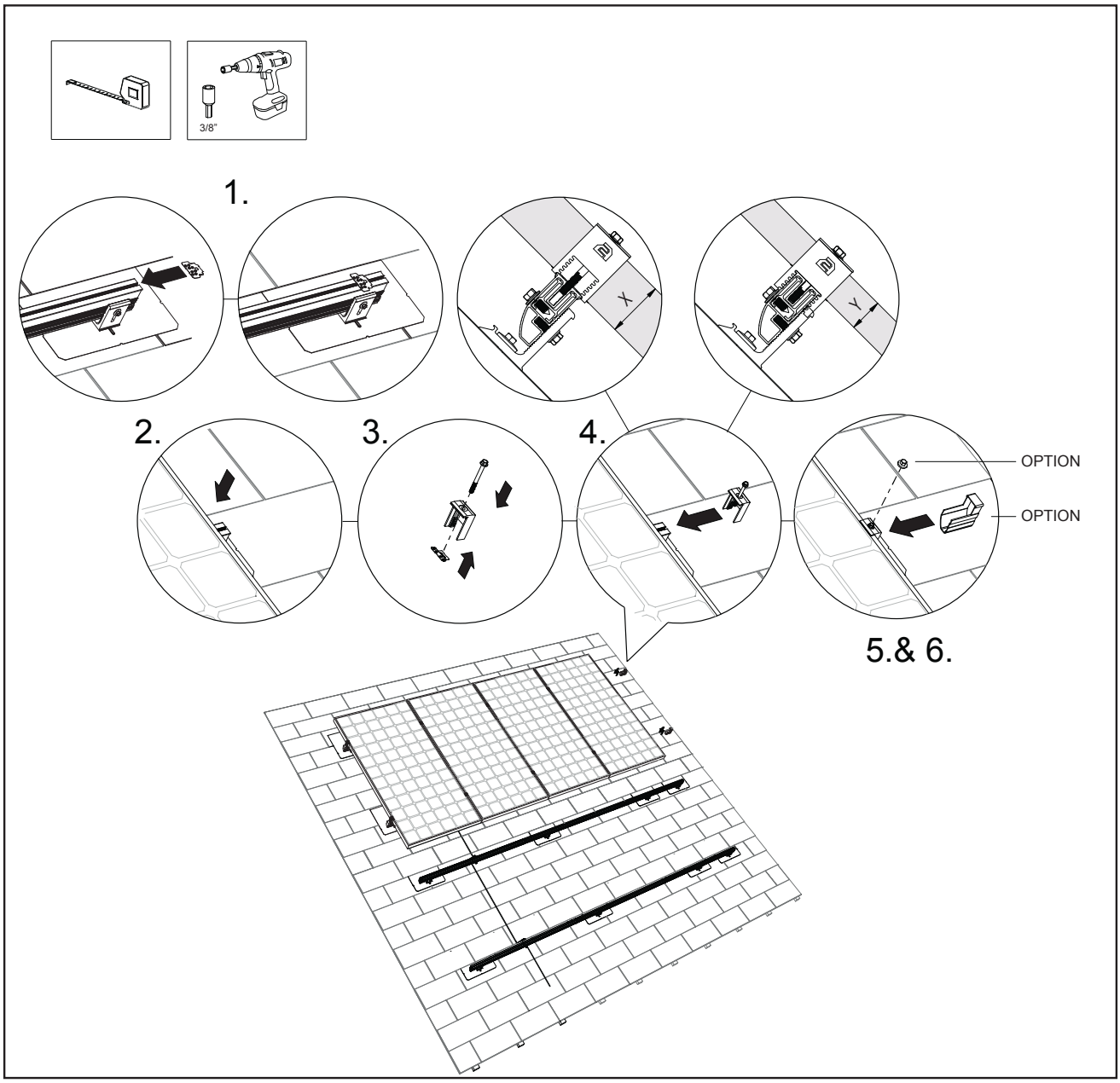

7.12 Final bonding and mounting / multiple rows underneath one another

Repeat the sections 7.9 – 7.11 to place multiple rows of PV modules.
Note: Make sure to leave a gap between the separate rows of minimal 0.28 inch (7 mm).

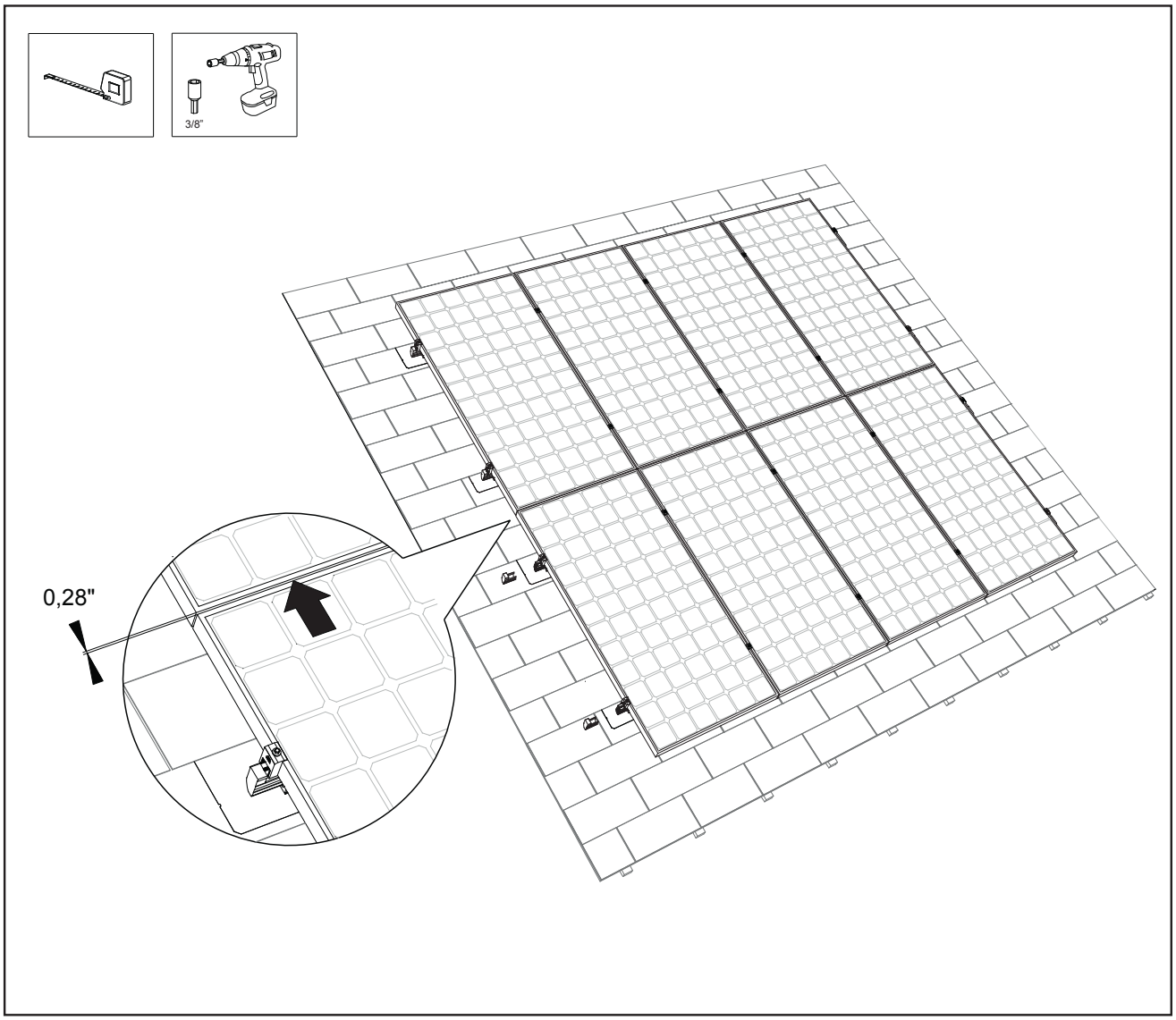

8. APPENDIX

8.1 Mounting bolt and End clamps

Frame height	End clamp	Mounting bolt	
31 mm	CFB	2 ¼” (57 mm)	100-5084
32 mm	CFA		
33 mm	CFA		
34 mm	CFB		
35 mm	CFB		
38 mm	CFB	2 ½” (64 mm)	100-5085
39 mm	CFB		
40 mm	CFA		
41 mm	CFA		
44 mm	CFA	2 ¾” (70 mm)	100-5086
45 mm	CFA		
46 mm	CFB		
47 mm	CFB		

8.2 The tightening torque of the screw and bolt connections

Connection	Screw or bolt dimensions (inches)	Screw or bolt dimensions (mm)	Torque value	Wrench/socket size (inches / mm)
L-bracket to roof	Lag bolt ¼” x L	6.5 x L mm	40 in-lbs / 4.5Nm	3/8” / S10
L-bracket to rail	Mounting bolt ¼”-20 x ¾”	6.5 x 20 mm	80 in-lbs / 9Nm	3/8” / S10
End / Mid clamp to rail	Mounting bolt ¼”-20 x L	6.5 x L mm	80 in-lbs / 9Nm	3/8” / S10
Splice to rail	Mounting screw ¼” x ¾”	6.0 x 20 mm	40 in-lbs / 4.5Nm	3/8” / S10
Grounding lug to rail	Mounting bolt 1/4”-20 x 2”	6.5 x 51 mm	120 in-lbs / 13.5Nm	3/8” / S10
Grounding lug to conductor	Mounting bolt 1/4”-28 x 5/8”	6.5 x 15.5 mm	90 in-lbs / 10Nm	7/16” / S11

8.3 Specifications for installation

8.3 - 01

Line the flashing plate up with the chalk lines on the roof using the markings in the bottom and the sides of the flashing plate.

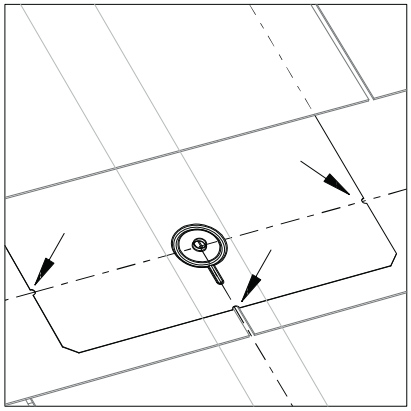

8.3 - 02

Make sure the raised side of the flashing plate is facing up.
The water drain channel should face down.

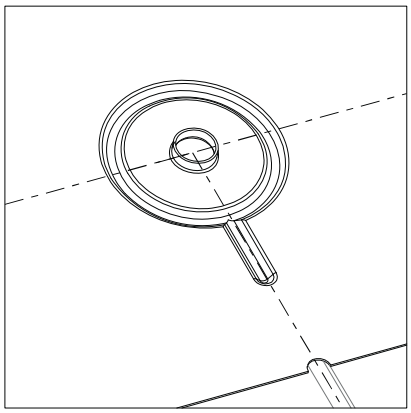

8.3 - 03

Slide the flashing plate sufficiently under the upper shingle.
Make sure that the distance of the fixation point of the flashings plate to the overlying shingle is at least 1 3/16” (30 mm).
Make sure that the flashing plate doesn’t overhang the shingle below.

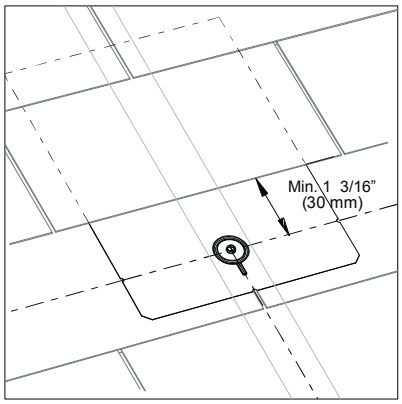

8.3 - 04

Place the L-brackets on the flashing plates. Make sure that the holes of the L-bracket and the flashing plate are aligned with the pilot hole and that the correct side of the L-bracket is facing upwards.

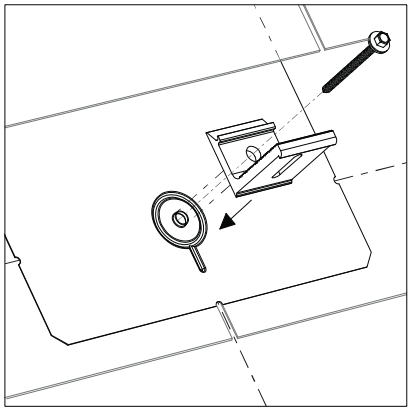

8.3 - 05

To fasten the splice to the mounting rail:
Mark the positions of the 2 pilot holes at each rail end.
1 inch (25.4 mm) from the end of the rail
2 inch (50.8 mm) between the pilot holes
Pre-drill the 2 pilot holes in each mounting rail end with ¼ inch drill.

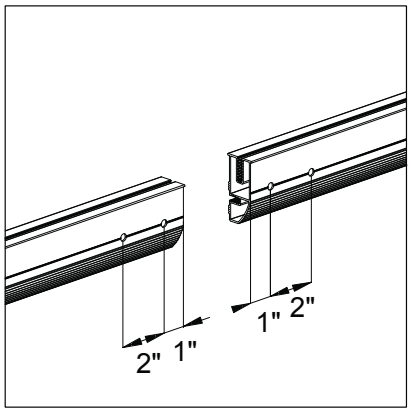

8.3 - 06

Slide the splice 3 ¾” (95 mm) into the mounting rail. Divide the splice evenly over the two rail ends.

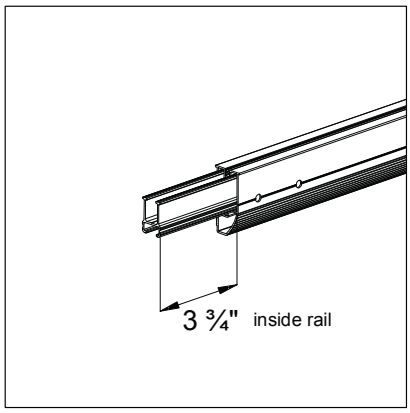

8.3 - 07

The mounting rail should not protrude less than 3 ¾” (95 mm) from the center of the closest L-bracket.

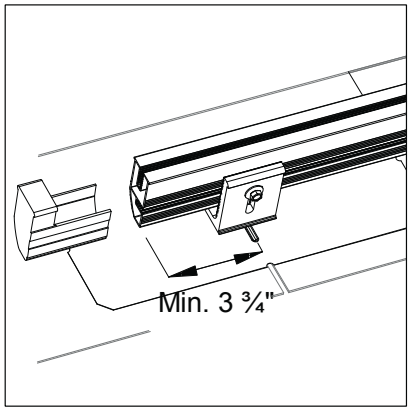

8.3 - 08

The mounting rail should not protrude more than 1 ½ ft (450 mm) from the center of the closest L-bracket.

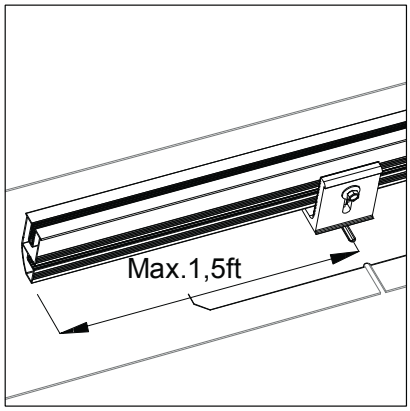

8.3 - 09

The minimum protrusion of the mounting rail should be ¾” (20 mm) from the end of the end clamp.

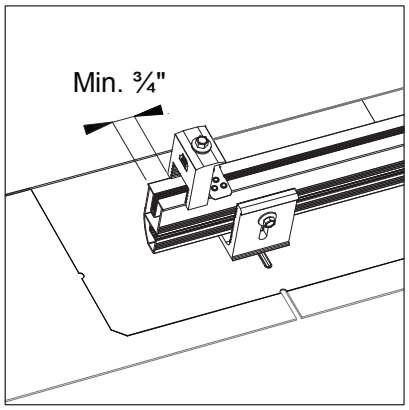

8.3 - 10

The minimum protrusion of the mounting rail should be ¾” (20 mm) from the center of the module clamp.

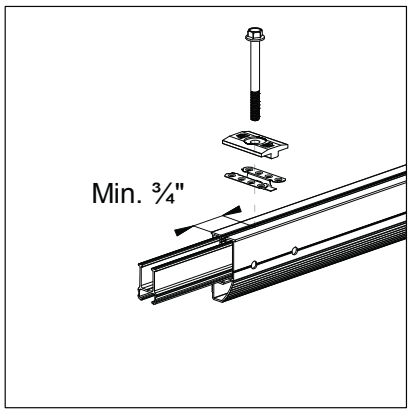

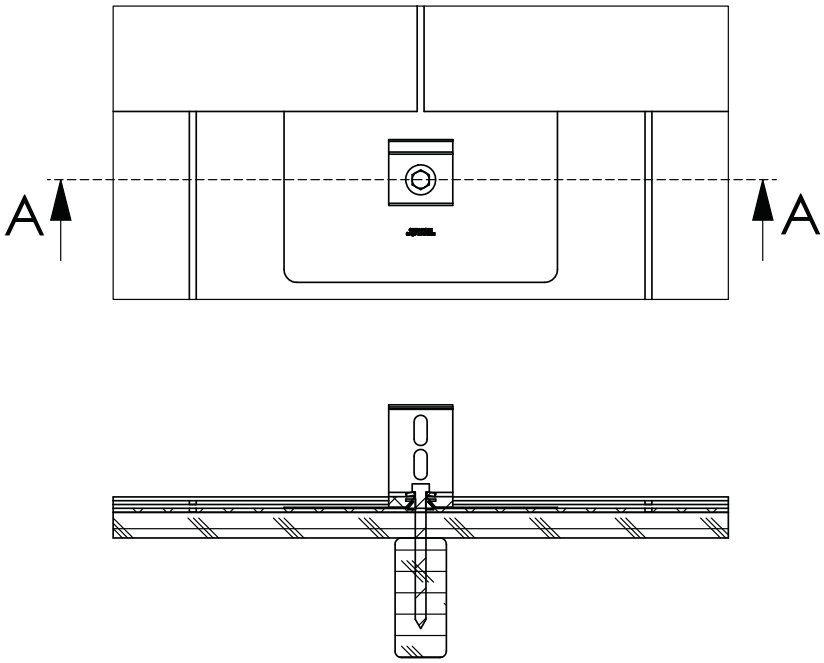

SECTION A-A

877-859-3947 EcoFasten Solar® All content protected under copyright. All rights reserved. 8/27/14
EcoFasten Solar products are protected by the following U.S. Patents: 8,151,522 B2 8,153,700 B2 8,181,398 B2 8,166,713 B2 8,146,299 B2 8,209,914 B2 8,245,454 B2 8,272,174 B2 8,225,557 B2

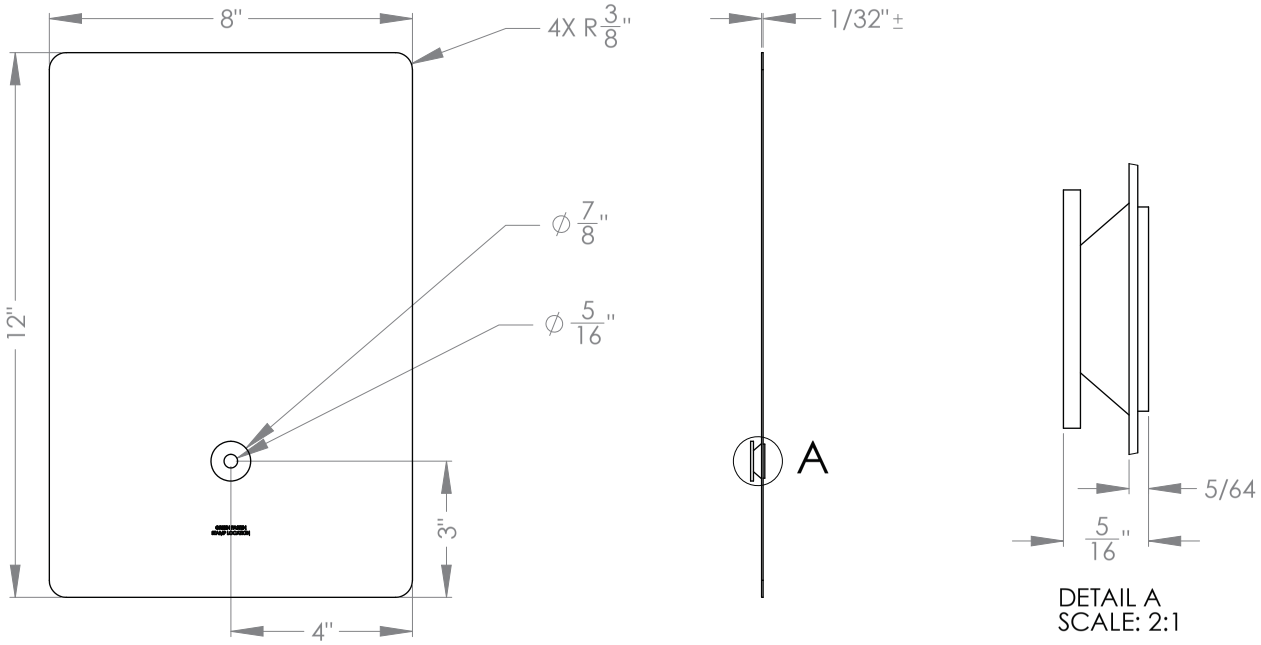

Finish Options
BLK = Matte Black
MLL = Mill Finish

877-859-3947 EcoFasten Solar® All content protected under copyright. All rights reserved. 8/27/14
EcoFasten Solar products are protected by the following U.S. Patents: 8,151,522 B2 8,153,700 B2 8,181,398 B2 8,166,713 B2 8,146,299 B2 8,209,914 B2 8,245,454 B2 8,272,174 B2 8,225,557 B2

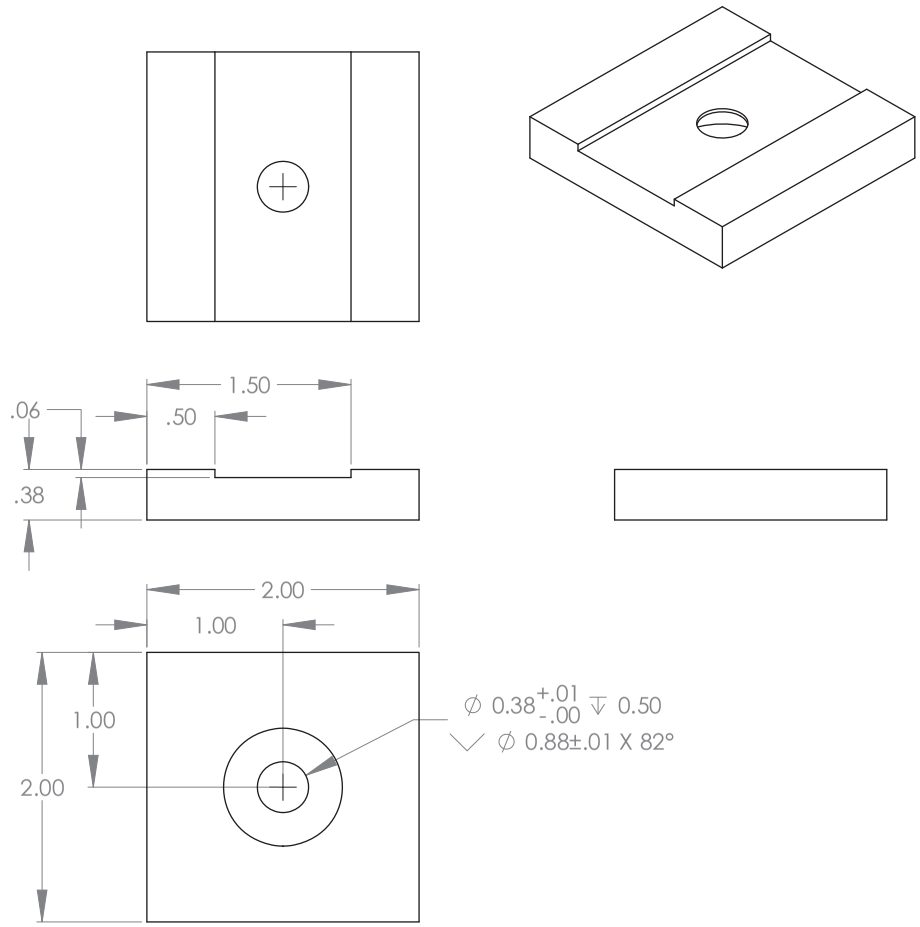

 EcoFasten Solar® All content protected under copyright. All rights reserved. 8/27/14
EcoFasten Solar products are protected by the following U.S. Patents: 8,151,522 B2 8,153,700 B2 8,181,398 B2 8,166,713 B2 8,146,299 B2 8,209,914 B2 8,245,454 B2 8,272,174 B2 8,225,557 B2

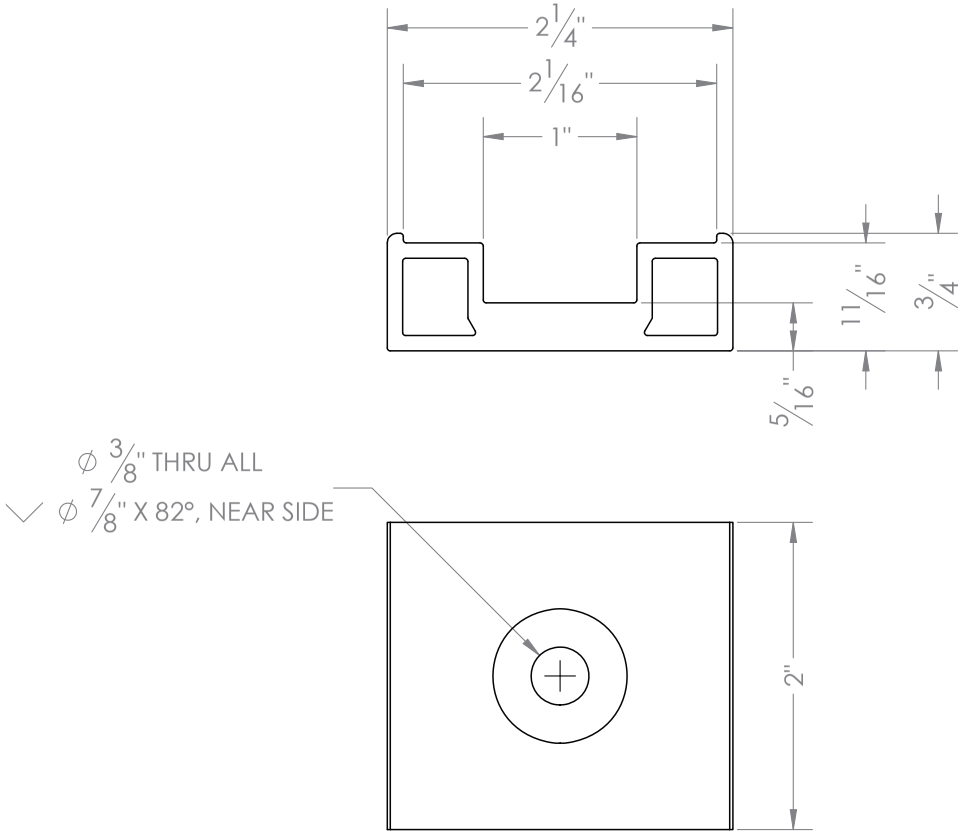

 All content protected under copyright. All rights reserved. 8/27/14

EcoFasten Solar products are protected by the following U.S. Patents: 8,151,522 B2 8,153,700 B2 8,181,398 B2 8,166,713 B2 8,146,299 B2 8,209,914 B2 8,245,454 B2 8,272,174 B2 8,225,557 B2

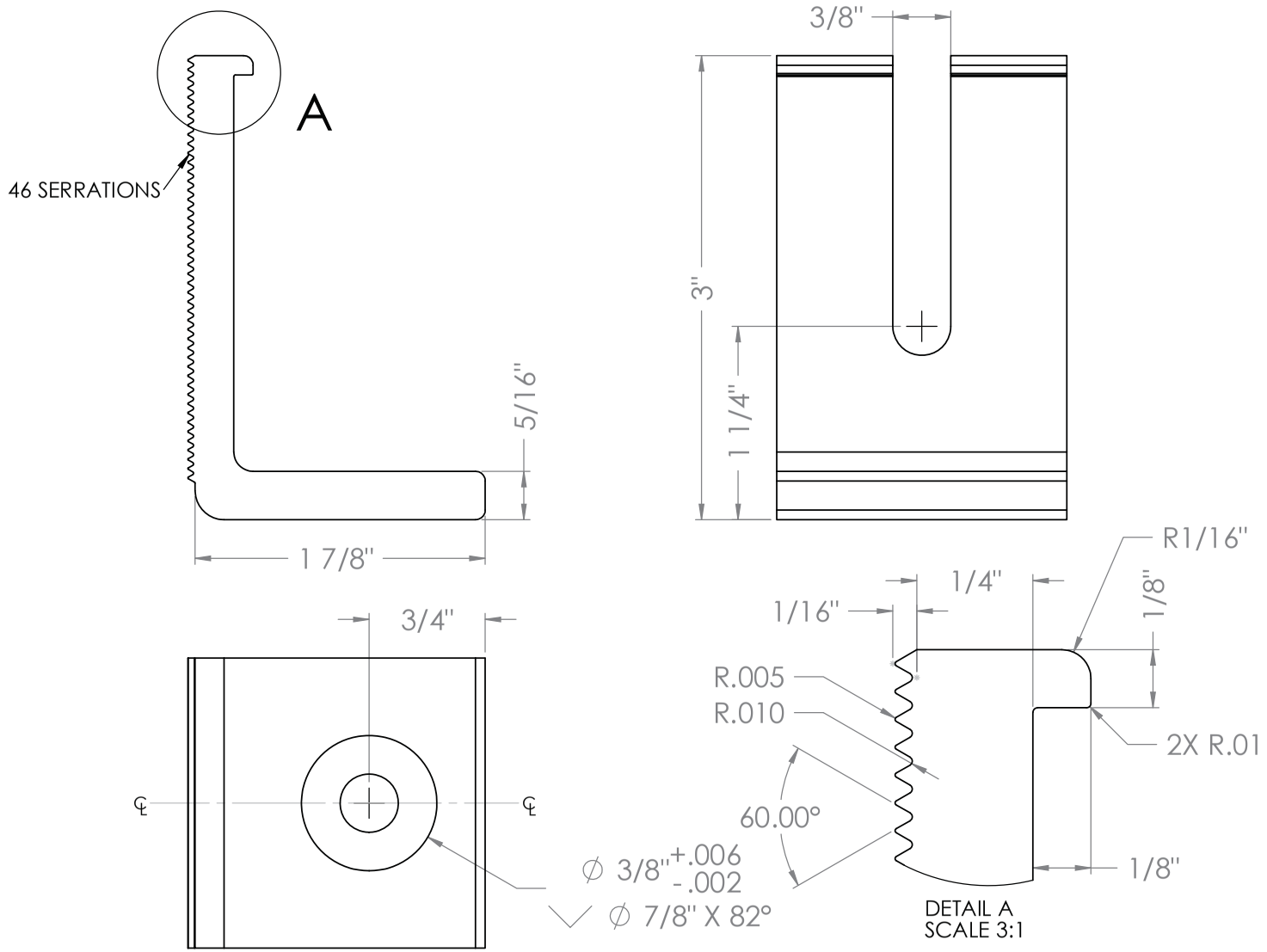

 EcoFasten Solar® All content protected under copyright. All rights reserved. 8/27/14
EcoFasten Solar products are protected by the following U.S. Patents: 8,151,522 B2 8,153,700 B2 8,181,398 B2 8,166,713 B2 8,146,299 B2 8,209,914 B2 8,245,454 B2 8,272,174 B2 8,225,557 B2

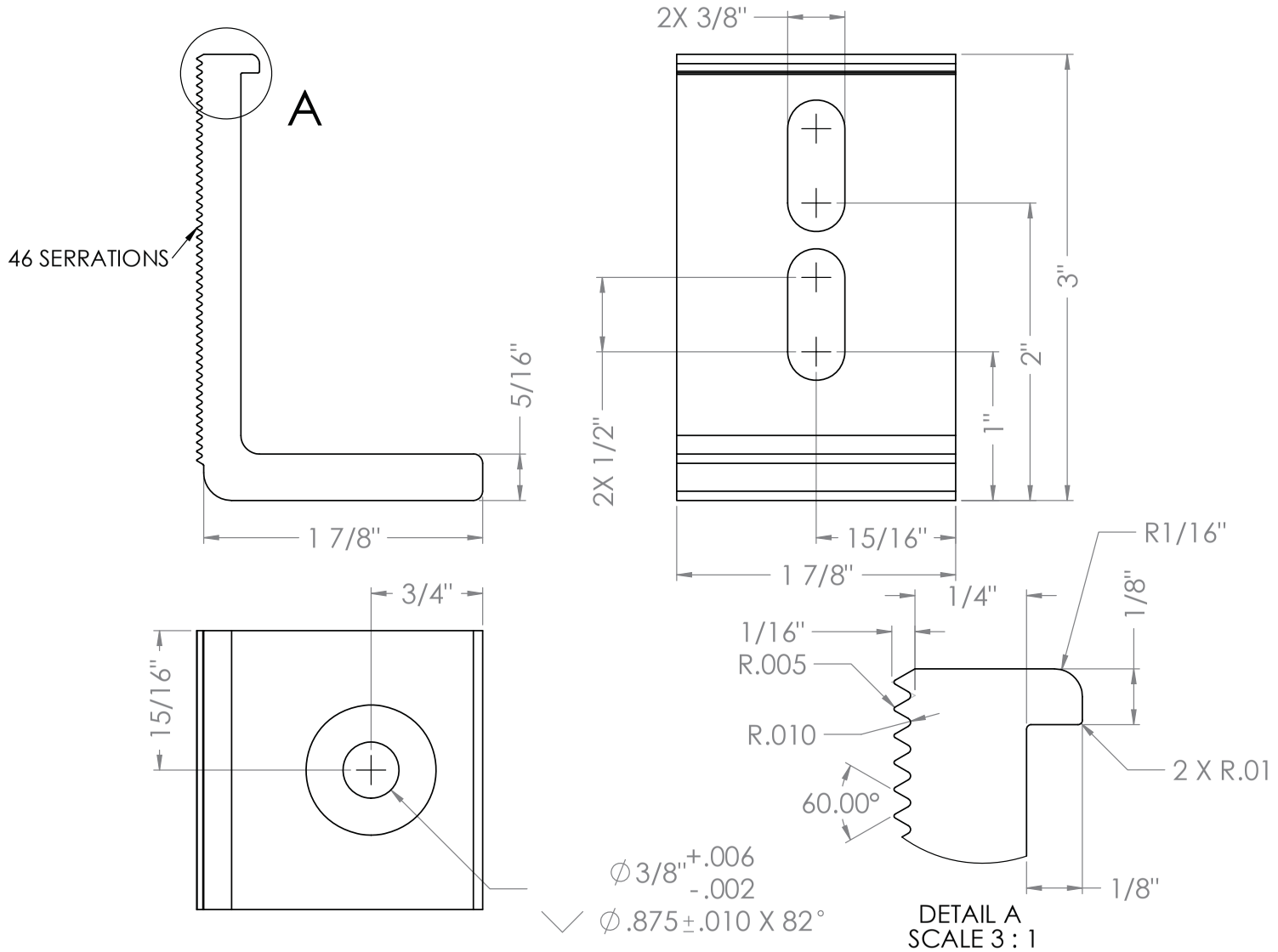

 All content protected under copyright. All rights reserved. 8/27/14
EcoFasten Solar products are protected by the following U.S. Patents: 8,151,522 B2 8,153,700 B2 8,181,398 B2 8,166,713 B2 8,146,299 B2 8,209,914 B2 8,245,454 B2 8,272,174 B2 8,225,557 B2

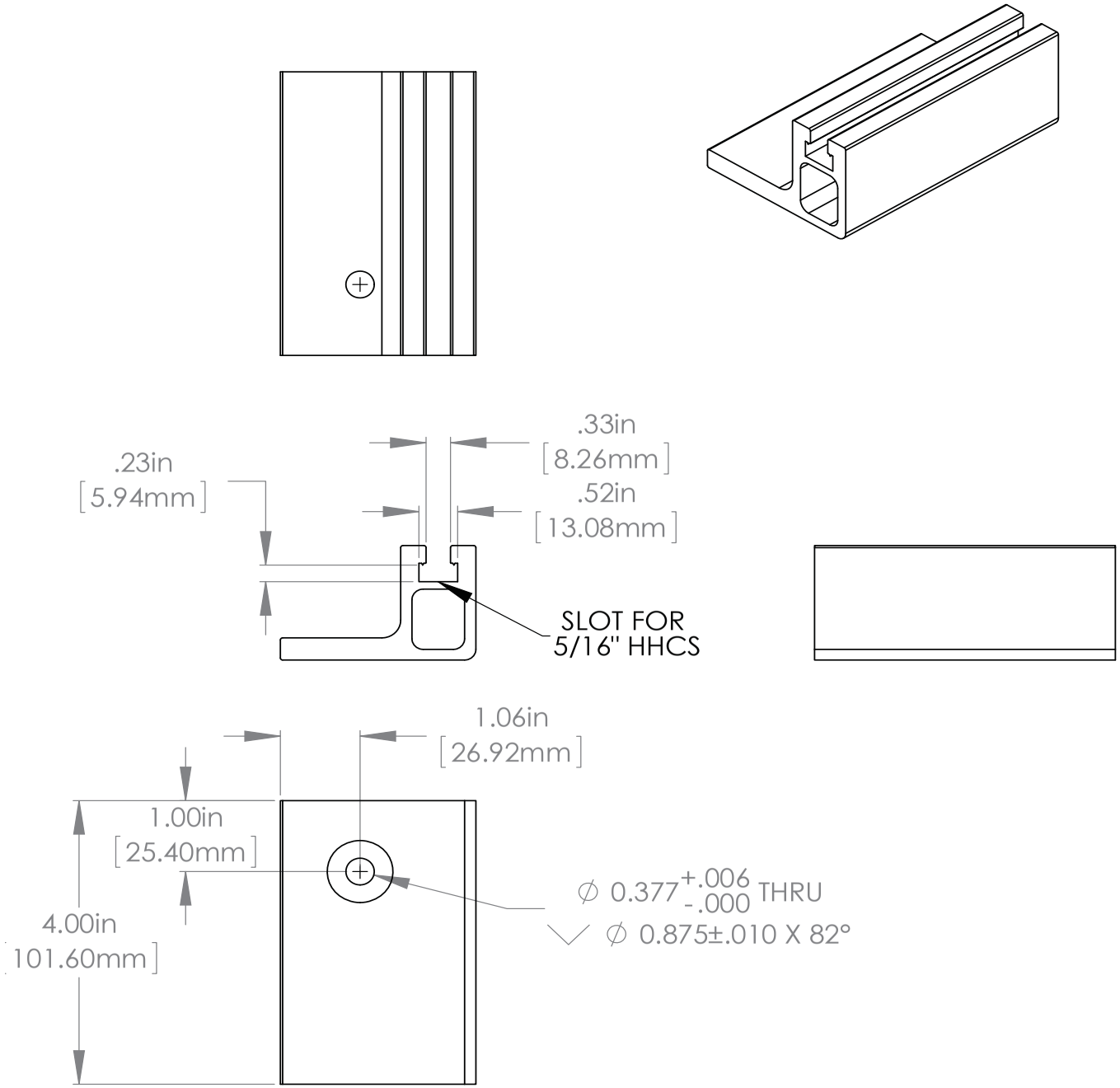

877-859-3947 EcoFasten Solar® All content protected under copyright. All rights reserved. 8/27/14
EcoFasten Solar products are protected by the following U.S. Patents: 8,151,522 B2 8,153,700 B2 8,181,398 B2 8,166,713 B2 8,146,299 B2 8,209,914 B2 8,245,454 B2 8,272,174 B2 8,225,557 B2

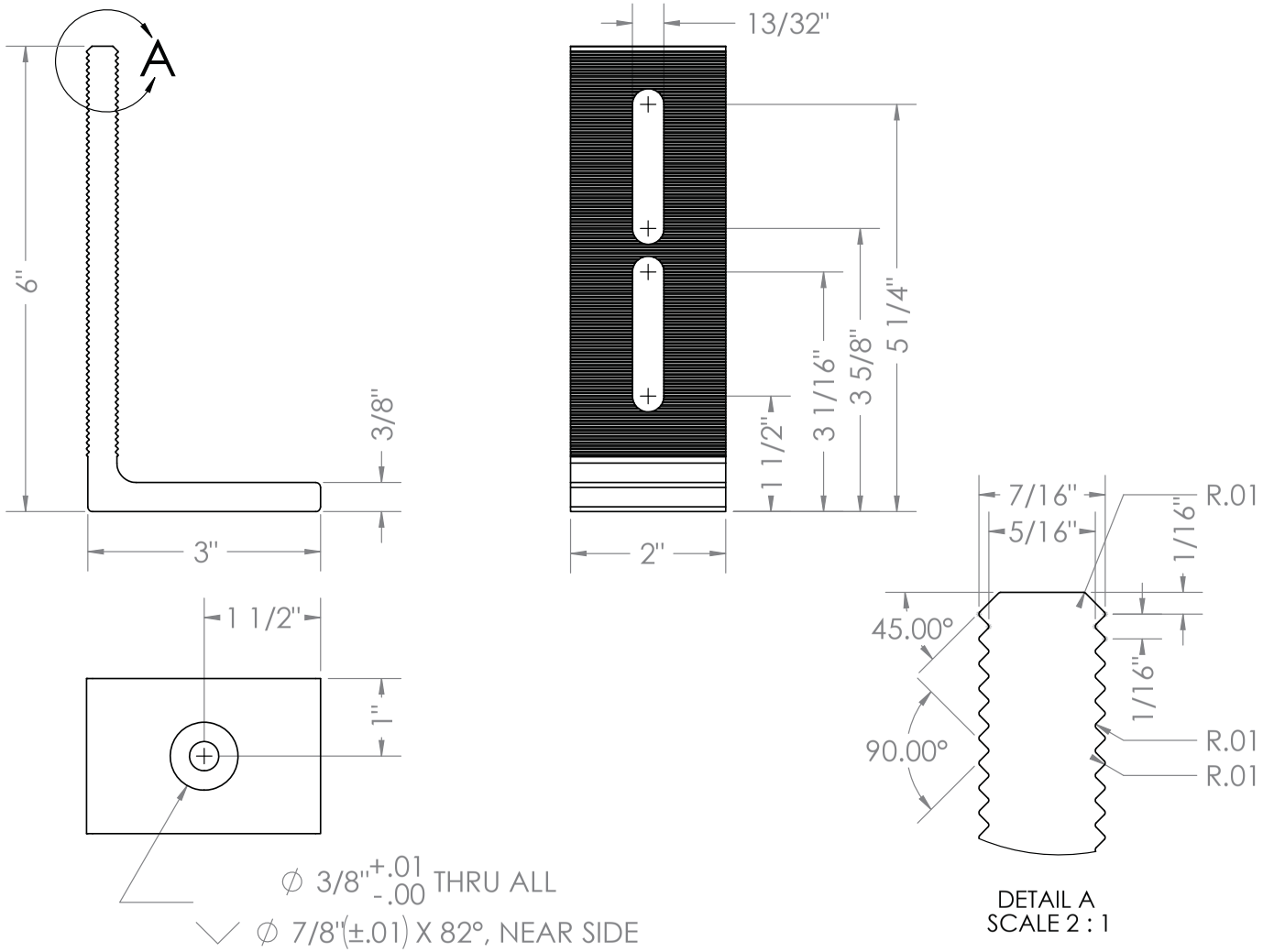

 All content protected under copyright. All rights reserved. 8/27/14

EcoFasten Solar products are protected by the following U.S. Patents: 8,151,522 B2 8,153,700 B2 8,181,398 B2 8,166,713 B2 8,146,299 B2 8,209,914 B2 8,245,454 B2 8,272,174 B2 8,225,557 B2

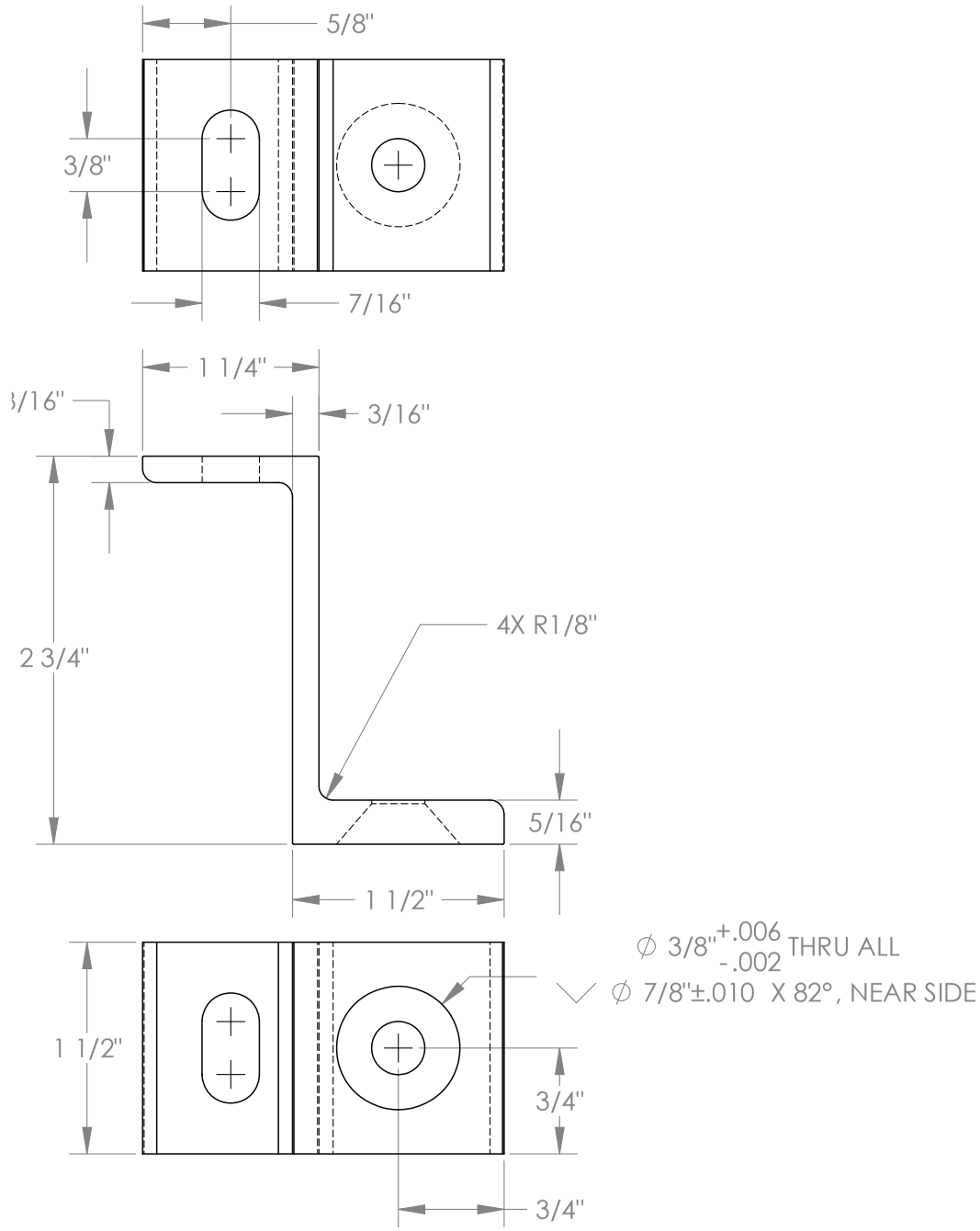

 All content protected under copyright. All rights reserved. 8/27/14

EcoFasten Solar products are protected by the following U.S. Patents: 8,151,522 B2 8,153,700 B2 8,181,398 B2 8,166,713 B2 8,146,299 B2 8,209,914 B2 8,245,454 B2 8,272,174 B2 8,225,557 B2

1429 Chesapeake Avenue

City of Chesapeake
Department of Planning

Record Summary for Certificate of Appropriateness

Record Detail Information

Record Type: Certificate of Appropriateness
Record Status: Open
File Date: February 27, 2020
Record Number: PLN-CAPP-2020-025
Expiration Date:
Description:
To add handrail to front porch
Record Name: 1429 Chesapeake Ave, chesapeake
Parent Record Number:

Address: 1429 Chesapeake AVE

Owner Information

Primary	Owner Name	Owner Address	Owner Phone
Yes	Cynthia Sellers	1009 Kincaid ave, Chesapeake, VA 23324	[redacted]

Parcel Information

Parcel No:
1340000002420

Contact Information

Name	Organization Name	Contact Type	Phone
Cynthia Sellers		Applicant	[redacted]

Address
1009 Kincaid Terrace, Chesapeake, VA 23320

Application Specific Information

NATURE OF THE APPLICATION

Description	To add handrail to front porch
Zoning Sign Off	No
Economic Hardship	No

PLANNING STAFF TO COMPLETE

Application After-the-Fact	-
After-the-Fact Fee Paid	-
Approved Administratively	-
Approving Planner	-
Approval Date	-
Certificate Number	-
See supplemental submittal requirements	-
Board Approved Certificate Number	-

I, _____, hereby grant permission for City Staff & members of the Historic Architectural Review Board to enter my site to view exterior areas related to theis Certificate of Appropriateness Application.	-
Structure Designation	-

GENERAL INFORMATION

Year Structure Built	1914
Is this an After-the-Fact application?	No
$250 After the Fact fee, if required.	UNCHECKED
One original delivered to the Planning Department OR a copy attached to the on-line application	UNCHECKED
One disk containing all photos OR photos attached to on-line application	UNCHECKED
☐ Completed and notarized power of attorney form if the applicant is not the property owner.	UNCHECKED

NEW CONSTRUCTION

Completed application form.	UNCHECKED
☐ Surveyed site plan (including proposed buildings, structure(s), parking, etc.).	UNCHECKED
Front and side elevations	UNCHECKED
Samples	UNCHECKED
Arrangement of proposed exterior lighting.	UNCHECKED
Photographs of the property and adjoining or opposite properties.	UNCHECKED

ADDITIONS TO EXIST. STRUCTURES

Completed application form.	UNCHECKED
Surveyed site plan or city tax map	UNCHECKED
Elevations	UNCHECKED
Photographs of the existing structure and property.	UNCHECKED
Samples, photos, and brochures	UNCHECKED
Arrangement of proposed exterior lighting.	UNCHECKED
☐ Proposed signs with appropriate detail as to character and location.	UNCHECKED

ALTERATIONS OR REPAIRS

Completed application form.	UNCHECKED
Written description of work to be performed	UNCHECKED
Photographs of the building/structure.	UNCHECKED
2 quotes each are required for the following:	UNCHECKED
Photos numerically keyed	UNCHECKED

RELOCATIONS

Completed application form	UNCHECKED
☐ Photographs of the building or structure to be relocated	UNCHECKED

and adjacent properties.

☐ Photographs of the premises to which the building or structure will be relocated.	UNCHECKED
☐ Written description of reasons for the relocation and the proposed use of the vacated property.	UNCHECKED

DEMOLITIONS

Completed application form	UNCHECKED
☐ Photographs of the building or structure to be demolished to illustrate its state of disrepair.	UNCHECKED
Written report on condition of building or structure.	UNCHECKED
Written description of work to be performed	UNCHECKED

METAL ROOFS

Explanation	UNCHECKED

SPECIAL POWER OF ATTORNEY

Special Power of Attorney attached	UNCHECKED

METAL ROOFS

Info required to replace metal roof with metal roof.	UNCHECKED
Picture	UNCHECKED
Specification Sheet	UNCHECKED
Roof color sample	UNCHECKED
Info required to replace metal roof with architectural shingles.	UNCHECKED
Quotes	UNCHECKED
Roof color sample (asphalt)	UNCHECKED

©Perpetua Iron.com

907 Ohio Street

City of Chesapeake
Department of Planning

Record Summary for Certificate of Appropriateness

Record Detail Information

Record Type: Certificate of Appropriateness
Record Status: Open
File Date: February 27, 2020
Record Number: PLN-CAPP-2020-024
Expiration Date:
Description:
Record Name: 907 Ohio st, Chesapeake, va
Replace metal roof with architectural shingles and put on handrail on front steps.
Parent Record Number:

Address: 907 OHIO ST, CHESAPEAKE, VA 23324

Owner Information

Primary	Owner Name	Owner Address	Owner Phone
Yes	LILLEY INVESTMENTS LLC	1906 PRELUDE DR, VIENNA, VA 221823346	[redacted]

Parcel Information

Parcel No:
1270000002860

Contact Information

Name	Organization Name	Contact Type	Phone
Cynthia Sellers		Applicant	[redacted]

Address
1009 Kincaid Terrace, Chesapeake, VA 23320

Application Specific Information

NATURE OF THE APPLICATION

Description	Tp replace the metal roof with architectural shingles and put new railing on front steps
Zoning Sign Off	No
Economic Hardship	No

PLANNING STAFF TO COMPLETE

Application After-the-Fact	-
After-the-Fact Fee Paid	-
Approved Administratively	-
Approving Planner	-
Approval Date	-
Certificate Number	-
See supplemental submittal requirements	-

Board Approved Certificate Number	-
I, _____, hereby grant permission for City Staff & members of the Historic Architectural Review Board to enter my site to view exterior areas related to theis Certificate of Appropriateness Application.	-
Structure Designation	-

GENERAL INFORMATION

Year Structure Built	1904
Is this an After-the-Fact application?	No
$250 After the Fact fee, if required.	UNCHECKED
One original delivered to the Planning Department OR a copy attached to the on-line application	UNCHECKED
One disk containing all photos OR photos attached to on-line application	UNCHECKED
☐ Completed and notarized power of attorney form if the applicant is not the property owner.	UNCHECKED

NEW CONSTRUCTION

Completed application form.	UNCHECKED
☐ Surveyed site plan (including proposed buildings, structure(s), parking, etc.).	UNCHECKED
Front and side elevations	UNCHECKED
Samples	UNCHECKED
Arrangement of proposed exterior lighting.	UNCHECKED
Photographs of the property and adjoining or opposite properties.	UNCHECKED

ADDITIONS TO EXIST. STRUCTURES

Completed application form.	UNCHECKED
Surveyed site plan or city tax map	UNCHECKED
Elevations	UNCHECKED
Photographs of the existing structure and property.	UNCHECKED
Samples, photos, and brochures	UNCHECKED
Arrangement of proposed exterior lighting.	UNCHECKED
☐ Proposed signs with appropriate detail as to character and location.	UNCHECKED

ALTERATIONS OR REPAIRS

Completed application form.	UNCHECKED
Written description of work to be performed	UNCHECKED
Photographs of the building/structure.	UNCHECKED
2 quotes each are required for the following:	UNCHECKED
Photos numerically keyed	UNCHECKED

RELOCATIONS

Completed application form	UNCHECKED

☐ Photographs of the building or structure to be relocated and adjacent properties.	UNCHECKED
☐ Photographs of the premises to which the building or structure will be relocated.	UNCHECKED
☐ Written description of reasons for the relocation and the proposed use of the vacated property.	UNCHECKED

DEMOLITIONS

Completed application form	UNCHECKED
☐ Photographs of the building or structure to be demolished to illustrate its state of disrepair.	UNCHECKED
Written report on condition of building or structure.	UNCHECKED
Written description of work to be performed	UNCHECKED

METAL ROOFS

Explanation	UNCHECKED

SPECIAL POWER OF ATTORNEY

Special Power of Attorney attached	UNCHECKED

METAL ROOFS

Info required to replace metal roof with metal roof.	UNCHECKED
Picture	UNCHECKED
Specification Sheet	UNCHECKED
Roof color sample	UNCHECKED
Info required to replace metal roof with architectural shingles.	UNCHECKED
Quotes	UNCHECKED
Roof color sample (asphalt)	UNCHECKED

©Perpetua Iron.com

1322 Stewart Street

Chesapeake VIRGINIA

Application for Certificate of Appropriateness

CHESAPEAKE PLANNING DEPARTMENT

APPLICATION NUMBER: _____
(Assigned by Chesapeake Planning Department)

1. **Address/Location of Project:** 1322 Stewart Street, Chesapeake, VA 23324
2. **Applicant(s):** David & Stephanie Austin

   Address: 1322 Stewart Street

   City: Chesapeake State: VA Zip: 23324

   Daytime Phone: [redacted] FAX Number: _____

   E-mail address: [redacted]

3. **Owner:** (If different from applicant)

   Name: same

   Address: _____

   City: _____ State: ____ Zip: _____

   Daytime Phone: _____ FAX Number: _____

   E-mail address: _____

   Signature of Applicant/Agent & Date: S Austin 2/24/20

4. **Nature of the Application** (add additional typed sheets if necessary):

replace rusted/deteriorated wrought iron porch railings and columns with wood railings and columns. The house originally had wood rails and wood columns (I still have the original wood top rail in my garage but we cannot find any wood matches). We propose to use 2x4 for the top and bottom rails and standard pickets; columns are white and load bearing. The rails and columns will be painted to match the house with red and white paints. The wrought iron rails and columns are so deteriorated and rusted that they did not sit on the porch any longer and could not be reattached to the replaced steps. When we replaced the steps, the wrought iron columns were just hanging from the porch roof. I was concerned with the stability of the porch roof so I replaced them.

5. **For new construction, additions, driveways, fences, etc. has Zoning signed off on the application?** YES _____ NO_____

6. **For replacement of a historic material roof with an architectural shingle roof, will you be applying for consideration of an economic hardship?** YES _____ NO_____

Planning Staff to Complete:

Is the Application After the Fact? YES X NO_____

My husband and I live paycheck to paycheck. I am currently behind on my real estate taxes and I cannot afford to shell out $250. It took me forever to be able to save enough to replace my steps and I had to use bill money to get the columns in an emergency to support to the porch roof. Is there any way to waive this or reduce this fee?
If so, request payment of $250 fee.

Can Application be administratively approved? **(See pages 1-2 of the instructions)** If so, provide date of approval_____(Date) by_____(Planner Name)

Certificate Number_____.

Determination of the Economic Hardship Committee if the applicant has applied for the replacement of a metal roof or historic material roof with architectural shingles YES _____ NO_____

If application needs to go to Board, please provide the date of the next meeting _____(see calendar and deadlines). **See pages 2-3 of the instructions for supplemental submittal requirements.**

Certificate Number_____.

If application goes to Board, have the applicant complete the following:

I, Stephanie Austin *hereby grant permission for City staff & City Council appointed members of the Historic and Architectural Review Board to enter my site to view the exterior areas that are the subject of the application and which are viewable from a public right of way.*

I understand and agree that the Historic and Architectural Review Board onsite inspections shall be exclusively related to this Certificate of Appropriateness Application and that reasonable notice shall be given to the property owners/applicants prior to any onsite inspections. I further agree that any onsite inspections shall be conducted as necessary and at the sole discretion of City staff and the Historic and Architectural

Review Board until the Historic and Architectural Review Board has taken final action on the application or the application has been withdrawn by the property owner/applicant.

SPECIAL POWER OF ATTORNEY

Application No: __

Tax Map Number(s): _____

Property Description (Street Address, if assigned, or Common Description, Borough):_____

_____

Nature of **certificate of appropriateness** sought: _____

_____

Applicants Interest in the Property

[ ]Owner
[ ] Contract Purchaser
[ ] Owner's Agent*
[ ] Lessee/Tenant*

***Owner or contract purchaser must complete the Power of Attorney Form below**

This____day of_____, 20____, the below-signed individuals do hereby appoint_____, mailing address of _____ _____, as their Attorney-in-fact and grant and confer to them the following powers with respect to the property located at _____in Chesapeake, Virginia:

1. Full authority to file an application with the South Norfolk Architectural Review Board ("ARB") for a certificate of appropriateness and/or appeal of the ARB's decision on this certificate of appropriateness to the Chesapeake City Council.
2. The power to amend in whole or in part any of the documents relating to the above-referenced application to the South Norfolk Architectural Review Board.
3. Full authority to appear before the South Norfolk Architectural Review Board at such time as the Board may consider the application for a certificate of appropriateness and/or before the Chesapeake City Council on appeal of the ARB's decision on this certificate of appropriateness.

The owner or contract purchaser understand that the attorney-in-fact appointed above may act on their behalf and thus both parties must communicate about the repairs and/or work that that may or may not be performed in the district, legal requirements of said work

or repairs, status of the application and/or comments and decisions made at public meetings on this application. The powers conferred herein shall terminate upon a final determination by Chesapeake's South Norfolk Architectural Review Board and/or the Chesapeake City Council's final determination on the ARB's decision on the application for a certificate of appropriateness.

Owner or Contract Purchaser: [1, 2]

sign _____

Name, Title Stephanie Austin

Company Owner

Owner or Contract Purchaser: [1, 2]

sign _____

Name, Title _____

Company _____

Commonwealth/State of VA

City of Chesapeake

Subscribed and sworn to before me this 19 day of March, 20 20

ROBYN L. WHITLEY NOTARY PUBLIC REG. #7723092 MY COMMISSION EXPIRES COMMONWEALTH OF VIRGINIA

Robyn L Whitley

NOTARY PUBLIC

Notary Registration Number: 7723092

My Commission expires on: 7-31-21

Commonwealth/State of _____

City of _____

Subscribed and sworn to before me this _____ day of _____, 20___.

_____

NOTARY PUBLIC

Notary Registration Number: _____

My Commission expires on: _____

1. **If the owner or contract purchaser is a corporation, partnership, or similar entity, documentation must be attached which establishes that the person signing on behalf of the entity has the authority to act on behalf of and to bind that entity.**
2. **If the party signing the Power of Attorney Form is a contract purchaser, a copy of the contract of sale showing their legal interest in the property must be attached to this Power of Attorney Form.**

FOR
RENT

02/18/2020
15:47

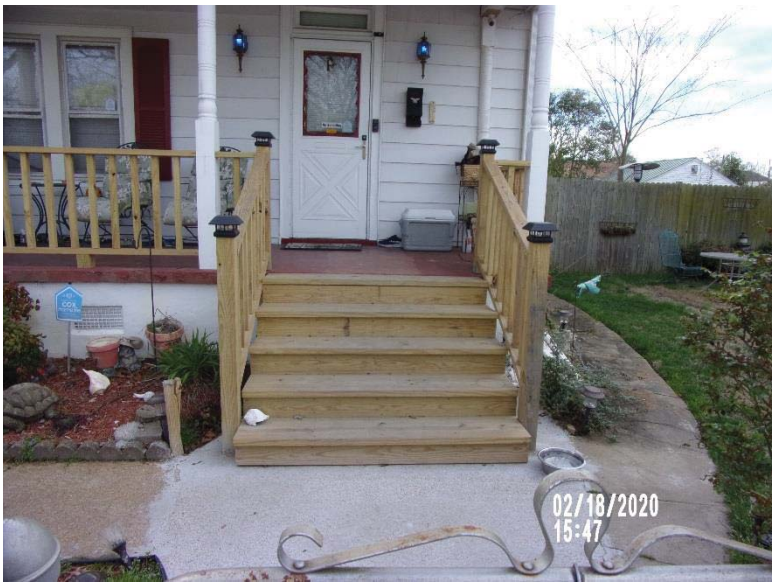
02/18/2020
15:47

1322
02/18/2020
15:47

02/18/20
15:49

02/18/2020
15:48

1220 Ohio Street

City of Chesapeake
Department of Planning

Record Summary for Certificate of Appropriateness

Record Detail Information

Record Type: Certificate of Appropriateness
Record Status: Open
File Date: April 16, 2020
Record Number: PLN-CAPP-2020-050
Expiration Date:
Description:
-
Record Name: Harriett Ellen Belfi
Parent Record Number:

Address: 1220 OHIO ST, CHESAPEAKE, VA 23324

Owner Information

Primary	Owner Name	Owner Address	Owner Phone
Yes	BELFI HARRIET E	1220 OHIO ST, CHESAPEAKE, VA 233242312	

Parcel Information

Parcel No:
1270000005010

Contact Information

Name	Organization Name	Contact Type	Phone
Harriett Ellen Belfi	BELFI HARRIET E	Applicant	[redacted]

Address
1220 OHIO ST, CHESAPEAKE, VA 233242312

Application Specific Information

NATURE OF THE APPLICATION

Description	replace rotted wooden windows with new windows
Zoning Sign Off	Yes
Economic Hardship	No

PLANNING STAFF TO COMPLETE

Application After-the-Fact	-
After-the-Fact Fee Paid	-
Approved Administratively	-
Approving Planner	-
Approval Date	-
Certificate Number	-
See supplemental submittal requirements	-
Board Approved Certificate Number	-

I, _____, hereby grant permission for City Staff & members of the Historic Architectural Review Board to enter my site to view exterior areas related to theis Certificate of Appropriateness Application.	-
Structure Designation	-

GENERAL INFORMATION

Year Structure Built	1924
Is this an After-the-Fact application?	Yes
$250 After the Fact fee, if required.	CHECKED
One original delivered to the Planning Department OR a copy attached to the on-line application	UNCHECKED
One disk containing all photos OR photos attached to on-line application	UNCHECKED
☐ Completed and notarized power of attorney form if the applicant is not the property owner.	UNCHECKED

NEW CONSTRUCTION

Completed application form.	UNCHECKED
☐ Surveyed site plan (including proposed buildings, structure(s), parking, etc.).	UNCHECKED
Front and side elevations	UNCHECKED
Samples	UNCHECKED
Arrangement of proposed exterior lighting.	UNCHECKED
Photographs of the property and adjoining or opposite properties.	UNCHECKED

ADDITIONS TO EXIST. STRUCTURES

Completed application form.	UNCHECKED
Surveyed site plan or city tax map	UNCHECKED
Elevations	UNCHECKED
Photographs of the existing structure and property.	UNCHECKED
Samples, photos, and brochures	UNCHECKED
Arrangement of proposed exterior lighting.	UNCHECKED
☐ Proposed signs with appropriate detail as to character and location.	UNCHECKED

ALTERATIONS OR REPAIRS

Completed application form.	UNCHECKED
Written description of work to be performed	UNCHECKED
Photographs of the building/structure.	UNCHECKED
2 quotes each are required for the following:	UNCHECKED
Photos numerically keyed	UNCHECKED

RELOCATIONS

Completed application form	UNCHECKED
☐ Photographs of the building or structure to be relocated	UNCHECKED

and adjacent properties.

☐ Photographs of the premises to which the building or structure will be relocated.	UNCHECKED
☐ Written description of reasons for the relocation and the proposed use of the vacated property.	UNCHECKED

DEMOLITIONS

Completed application form	UNCHECKED
☐ Photographs of the building or structure to be demolished to illustrate its state of disrepair.	UNCHECKED
Written report on condition of building or structure.	UNCHECKED
Written description of work to be performed	UNCHECKED

METAL ROOFS

Explanation	UNCHECKED

SPECIAL POWER OF ATTORNEY

Special Power of Attorney attached	UNCHECKED

METAL ROOFS

Info required to replace metal roof with metal roof.	UNCHECKED
Picture	UNCHECKED
Specification Sheet	UNCHECKED
Roof color sample	UNCHECKED
Info required to replace metal roof with architectural shingles.	UNCHECKED
Quotes	UNCHECKED
Roof color sample (asphalt)	UNCHECKED

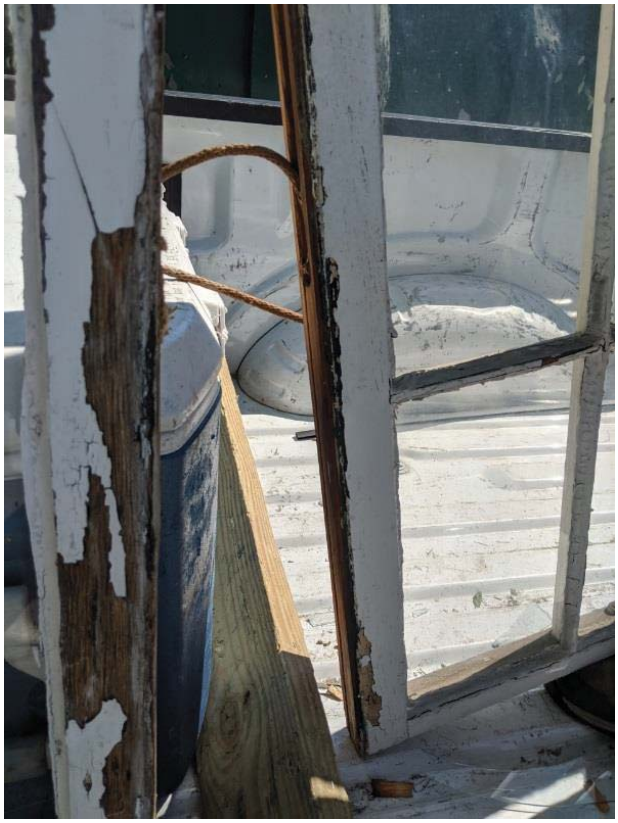

Back to Quote

LOWE'S
NEVER STOP IMPROVING

Date: 04/24/2020

LOWE'S HOME CENTERS, LLC #1065
1081 NORTH MILITARY HIGHWAY
NORFOLK, VA 23502-2438
USA
(757) 455-5205

SPECIAL ORDER
Pedido especial

Project #:	622010708	Description:	window estimate
Customer Name:	ELLEN BELFI		
Customer Phone:	(757) 477-7130		
Customer Address:	1220 OHIO STREET CHESAPEAKE, VA 23324 USA		

Line Item Frame Size	Product Code Description	Unit Price	Quantity	Total Price
0002 Size = 35 1/2-in W x 61 1/2-in H 	**Manufacturer:** Pella (R) 250 Series Windows Double Hung NFRC: U-Factor: 0.27, SHGC: 0.28, VLT: 0.53, CR: 57 Double Hung DP35: Size Tested 36-in x 63-in Division: Millwork Product: Windows Type: Double Hungs Manufacturer: Pella (R) 250 Series Windows Energy Star (R) Qualified Products Only: No - I would like to view all available product offering Location East or West: East Room Location: Other 1 Configuration: 1 Wide Frame Type: Block Actual Frame Width: 35 1/2-in Actual Frame Height: 61 1/2-in Fits Opening Width: 35 3/4-in Fits Opening Height: 61 3/4-in Venting Height: Equal Unit Type: Complete Unit Performance Option: Standard Exterior Material Type: Vinyl Foam Insulated: Foam Insulated Actual Base Frame Depth: 3 1/4-in Actual Base Wall Depth: 3 1/4-in Sill Adapter: Sill Adapter Included Head Expander: Head Expander Included Exterior Color: White Interior Color: White Glazing Type: Insulated Insulated Type: Dual Glass Strength: Annealed Insulated Glass Option: Low-E Low-E Glass Style: Advanced Low-E Insulating Glass	$315.86	16	$5,053.76

Installation price not included in quote

4/24/20, 14:5

Actual Sill Exterior Trim: 1-in Sill Nose
Attachment Method Application: Factory Applied
Exterior Overall Width Including Trim: 38.360000
Exterior Overall Height Including Trim: 65.072000
Actual Jamb Extended Wall Depth: 3 11/16-in
Wall Depth Application: Factory Applied
Is This A Remake?: No
Lead Time: 35 Days
Item Number: 153620

5 1/2-in W x 61
t

Manufacturer: ThermaStar by Pella (R)

Double Hung NFRC: U-Factor: 0.3, SHGC: 0.28, VLT: 0.53, CR: 56
Double Hung DP35: Size Tested 36-in x 72-in
Performance values only valid for a single window and do not apply to mullions

Product: Windows
Type: Double Hungs
Manufacturer: ThermaStar by Pella (R)
Energy Star(R) Qualified Products Only: No - I would like to view all available product offering.
Room Location: Other 1
Material: Vinyl
Actual Frame Type(Overall Width): Replacement Frame (3 1/4-in OAW - No Fin)
Sloped Sill Adaptor: Yes - Included
Head Expander: Yes - Included
Configuration: One Wide
Actual Frame Size Width: 35 1/2-in
Actual Frame Size Height: 61 1/2-in
Fits Opening Width: 35 3/4-in
Fits Opening Height: 61 3/4-in
Actual Vent Size: 1/2 Vent
Exterior Finish: White
Interior Finish: White
Glazing: Advanced Low-E
Argon Gas Filled IG: Yes - Argon Gas
Tempered Glass: Tempered
Grilles Between Glass Type: None
Hardware: 2 Cam/Keeper Lock Sets

Product only - not installation

$408.3616 $6,533.76

4/24/20,

Grille Type: No Grille
Is This A Remake?: No
Lead Time: 35 Days
Item Number: 877673

2-in H

Manufacturer: Pella (R) 850 Series

Double Hung NFRC: 0
Double Hung DP35: Size Tested 37-in x 65-in
Division: Millwork
Product: Windows
Type: Double Hungs
Manufacturer: Pella (R) 850 Series
Energy Star (R) Qualified Products Only: No - I would like to view all available product offering
Product Family: Full Frame Pella Products
Style Collection: Traditional
Room Location: Other 1
Configuration: 1 Wide
Actual Frame Width: 36-in
Actual Frame Height: 62-in
Fits Opening Width: 36 3/4-in
Fits Opening Height: 62 3/4-in
Operation / Venting: Double Hung
Venting Height: Equal
Unit Type: Complete Unit
Performance Option: Standard
Exterior Material Type: Clad
Wood Type: Douglas Fir
Edition: Luxury
Actual Base Frame Depth: 5-in
Actual Base Wall Depth: 3 11/16-in
Exterior Paint Grade: Standard EnduraClad
Exterior Color: White
Interior Finish: Unfinished
Exterior Sash / Panel Profile: Ogee
Interior Sash / Panel Profile: Ogee
Sash Lugs: No Sash Lugs
Glazing Type: Insulated
Insulated Type: Dual
Glass Strength: Annealed
Insulated Glass Options: Low-E
Low-E Glass Style: Advanced Low-E Insulating Glass
Gas Filled: Argon
High Altitude: Non High Altitude
Sash Lock: Cam-Action Lock
Window Opening Control Device: No Window Opening Control

Product only - does not quote installation price

$1,218.46	16	$19,495.36

4/24/20, 14:54